EMR MODEL 4142
PROPORTIONAL BANDWIDTH (PBW)
TUNABLE DISCRIMINATOR
(REVISION H)

FAIRCHILD WESTON SYSTEMS INC.
FAIRCHILD WESTON
Schlumberger
Excellence in Defense Systems Technology...Worldwide
DATA SYSTEMS DIVISION
P.O. Box 3041, Sarasota, Florida 33578
(813) 371-0811 • Telex 052-890 • TWX 810-864-0406

MP MASTER
MA29954

EMR MODEL 4142
PROPORTIONAL BANDWIDTH (PBW)
TUNABLE DISCRIMINATOR
(REVISION H)

INSTRUCTION MANUAL

MAY 1985

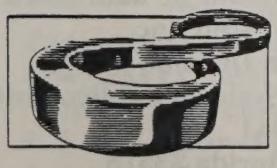

FAIRCHILD WESTON SYSTEMS INC.

FAIRCHILD WESTON Schlumberger

Excellence in Defense Systems Technology...Worldwide

DATA SYSTEMS DIVISION
P.O. Box 3041, Sarasota, Florida 33578
(813) 371-0811 • Telex 052-890 • TWX 810-864-0406

Basic .....November 1969
Rev. A.....May 1970
Rev. B.....August 1970
Rev. C.....January 1971
Rev. D.....April 1971
Rev. E.....May 1972
Rev. F.....May 1978
Rev. G.....March 1984
Rev. H.....May 1985

Copyright 1986 by Fairchild Weston Inc.

All rights reserved. No part of this manual may be reproduced or utilized on any form or by any means, electronic or mechanical, including photocopying, recording, or by information storage and retrieval system, without permission in writing.

Inquiries should be addressed to:
Fairchild Weston, Inc.
Data System Division
Telemetry Systems Publications
P.O. Box 3041
Sarasota, Florida 33578

TABLE OF CONTENTS

SECTION		PAGE
1	GENERAL DESCRIPTION	1-1
	1.1 Introduction	1-1
	1.2 Functional Description	1-2
	1.3 Physical Description	1-2
2	SPECIFICATIONS	2-1
	2.1 General	2-1
	2.2 Electrical Specifications	2-1
	2.2.1 Input Characteristics	2-1
	2.2.2 Output Characteristics	2-2
	2.3 Mechanical Specifications	2-4
3	INSTALLATION AND OPERATION	3-1
	3.1 Installation	3-1
	3.2 Operation	3-1
	3.2.1 Local Mode of Operation	3-1
	3.2.1.1 Initial Checks and Adjustments	3-8
	3.2.1.2 Typical Operational Setup Procedure	3-9
	3.2.2 Remote Mode of Operation	3-10
	3.2.3 Tape-Speed Compensation (TSC) System	3-10
4	THEORY OF OPERATION	4-1
	4.1 General	4-1
	4.2 General Theory of Operation	4-1
	4.3 Detailed Theory of Operation	4-4
	4.3.1 Programming Control	4-4
	4.3.2 Input Control Function	4-4
	4.3.2.1 Band-Pass Input Filter	4-4
	4.3.2.2 INPUT Meter Control and Zero Signal Detector	4-6
	4.3.2.3 Out-of-Range Detector	4-7
	4.3.3 FM Detection Circuit Group	4-8
	4.3.3.1 Limiter Function	4-8
	4.3.3.2 Detector and Single Pole Functions	4-11
	4.3.4 Tape-Speed Compensation	4-12
	4.3.5 Low-Pass Output Filter and Output Amplifier Circuit Group	4-14
	4.3.5.1 Low-Pass Output Filter	4-14
	4.3.5.2 Output Amplifier Circuit	4-16
	4.3.6 DC Power Circuits	4-17

Digitized by the Internet Archive
in 2025

https://archive.org/details/manualsplus_07841

TABLE OF CONTENTS (CONT'D.)

SECTION			PAGE
5	MAINTENANCE		5-1
	5.1	General	5-1
	5.2	Troubleshooting Guide	5-1
	5.3	Checkout and Adjustment	5-2
		5.3.1 Test Equipment Required	5-2
		5.3.2 Voltage Regulators	5-3
		5.3.3 Input Control and Band-Pass Circuits Checkout Procedures	5-3
		5.3.3.1 Band-Pass Input Filter Checkout Procedure	5-3
		5.3.3.2 Zero Signal Detector Checkout and Adjustment Procedure	5-4
		5.3.3.3 INPUT Meter Circuit Checkout Procedure	5-4
		5.3.3.4 Out-of-Range Detector Checkout Procedure	5-5
		5.3.4 FM Detector Circuit Group Checkout Procedures	5-5
		5.3.4.1 Limiter Circuit Checkout and Adjustment Procedure	5-5
		5.3.4.2 Detector Circuit Checkout Procedure	5-6
		5.3.5 Low-Pass Output Filter and Output Amplifier Circuit Group Checkout Procedures	5-6
		5.3.5.1 LPOF Checkout and Adjustment Procedure	5-7
		5.3.5.2 Output Amplifier Checkout and Adjustment Procedure	5-7
		5.3.6 Tape-Speed Compensation (TSC) Circuit Checkout and Adjustment Procedure	5-9
6	PARTS LISTS AND RECOMMENDED SPARES		6-1
	6.1	General	

LIST OF ILLUSTRATIONS

FIGURE		PAGE
1-1	Model 4142 PBW Tunable Discriminator Simplified Block Diagram	1-3
1-2	EMR Model 4142 PBW Tunable Discriminator Major Assemblies	1-5
1-3	Card File Assembly A2 Printed-Wiring Card Complement.	1-6
2-1	Variable Chart	2-5
3-1	Model 4142 PBW Tunable Discriminator Rear Panel Configuration.	3-2
3-2	Front Panel Assembly (A1) Operating Controls, Indicators, and Test Points	3-4
3-3	REMOTE CONTROL Connector A3J5 Pin-Location Diagram	3-10
3-4	Tape-Speed Compensation System Block Diagram	3-10
4-1	Model 4142 Functional Block Diagram	4-2
4-2	Input Control and BPIF Circuit Group Functional Block Diagram	4-5
4-3	Out-of-Range Detector Simplified Schematic Diagram	4-9
4-4	FM Detector Circuit Group Functional Block Diagram	4-10
4-5	Tape-Speed Compensation Circuit Group Simplified Logic Diagram	4-13
4-6	Low-Pass Output Filter and Output Amplifier Circuit Group Functional Block Diagram	4-15
5-1	Model 4142 PBW Tunable Discriminator Major Assembly Locations	5-10
5-2	Subpanel Assembly A1 Assembly Diagram	5-11
5-3	Subpanel Assembly A1 Wiring Diagram	5-12
5-4	Card Chassis A2 Wiring Diagram	5-13
5-5	Input Card A2A3 Assembly Diagram	5-19
5-6	Input Card A2A3 Schematic Diagram	5-20
5-7	BPIF Section 1 Card A2A5 Assembly Diagram	5-21
5-8	BPIF Section 1 Card A2A5 Schematic Diagram	5-22
5-9	BPIF Section 2 Card A2A6 Assembly Diagram	5-23
5-10	BPIF Section 2 Card A2A6 Schematic Diagram	5-24
5-11	TSC Card A2A7 Assembly Diagram	5-25
5-12	TSC Card A2A7 Schematic Diagram	5-26
5-13	Limiter, Detector, and Single Pole Card A2A8 Assembly Diagram	5-27
5-14	Limiter, Detector, and Single Pole Card A2A8 Schematic Diagram	5-28
5-14A	Detector Switches Assembly, Assembly Diagram	5-28A
5-14B	Detector Switches Assembly, Schematic Diagram	5-28B
5-15	Pole Pair Cards A2A10, A2A11, and A2A12 Assembly Diagram	5-29
5-16	Pole Pair Cards A2A10, A2A11, and A2A12 Schematic Diagram	5-30

LIST OF ILLUSTRATIONS (CONT'D.)

FIGURE		PAGE
5-17	Regulator and Output Amplifier Card A2A15 Assembly Diagram	5-31
5-18	Regulator and Output Amplifier Card A2A15 Schematic Diagram	5-32
5-19	Rear Connector Panel A3 Assembly Diagram	5-33
5-20	Rear Connector Panel A3 Wiring Diagram	5-34
5-21	Power Supply Assembly A4 Assembly Diagram	5-35
5-22	Power Supply Assembly A4 Schematic Diagram (Models 4142-0X-0)	5-36
5-23	Power Supply Assembly A4 Schematic Diagram (Models 4142-0X-8)	5-37

LIST OF TABLES

TABLE NO.		PAGE
1-1	Card File Chassis, A2, Printed-Wiring Card Descriptions	1-7
3-1	Model 4142 PBW Tunable Discriminator Function of Rear-Panel Connectors	3-3
3-2	Function of Front Panel Controls and Indicators	3-5
3-3	Remote Control Programming Instructions	3-11

SECTION 1

GENERAL DESCRIPTION

1.1 INTRODUCTION

This manual contains information describing the EMR Model 4142 Proportional Bandwidth (PBW) Tunable Discriminator. Included in this information are functional and physical descriptions of the unit, specifications, installation and operating instructions, theory of operation, maintenance data, and parts lists.

The Model 4142 discriminator is a precision built, solid-state instrument designed for rack mounting in an FM data processing or checkout system. The discriminator is designed to process analog or pulse type intelligence data contained in an FM subcarrier channel. All operating parameters (center frequency, deviation, data cutoff, response characteristic, and polarity sense) are manually selectable from the front panel or remotely programmable from an external device.

FM subcarrier center frequencies between 100 Hz and 1.5 MHz are selectable to four significant digits. Standard center-frequency deviations of ±7.5%, ±15%, ±20%, ±30%, and ±40% are provided. Tunable output filters provide either constant-delay or constant-amplitude characteristics with data-cutoff frequencies between 4 Hz and 300 kHz.

The discriminator is available in any of six standard design-sequence variations. These are described as follows:

a. Model 4142-01 -- Standard unit containing a three-pole low-pass output filter for a rolloff of 18 db/octave beyond selected cutoff frequency. Tape-speed compensation (TSC) is not included.

b. Model 4142-02 -- Same as Model 4142-01, except TSC is included.

c. Model 4142-03 -- Standard unit containing a five-pole low-pass output filter for a rolloff of 30 db/octave beyond selected cutoff frequency. TSC is not included.

d. Model 4142-04 -- Same as Model 4142-03, except TSC is included.

e. Model 4142-05 -- Standard unit containing a seven-pole low-pass output filter for a rolloff of 42 db/octave beyond selected cutoff frequency. TSC is not included.

f. Model 4142-06 -- Same as Model 4142-05, except TSC is included.

1.2 FUNCTIONAL DESCRIPTION

The discriminator (Figure 1-1) extracts a subcarrier channel from an FM multiplex and detects the intelligence data contained in that channel. This intelligence data is presented at the discriminator output in the form of varying analog voltages.

A tunable band-pass input filter (BPIF) at the discriminator input extracts the desired subcarrier frequency from the input FM multiplex, all other subcarrier frequencies are attenuated. The single-channel BPIF output is amplitude limited and pulse shaped by a four-stage high-gain limiter circuit.

The FM detector is a dual-channel circuit employing full-wave pulse-averaging FM detection for determining the amount and direction of the subcarrier modulation. This modulation results in a change in the duty cycle. The detector is driven by complementary phase outputs of an internal limiter circuit and provides a fixed current pulse to the low-pass filter for each half period of the subcarrier waveform. A tape-speed compensation input is fed into the detector through a delay network.

The modulation component is filtered by a tunable three-, five-, or seven-pole low-pass output filter with a selectable constant-delay or constant-amplitude characteristic. An output amplifier at the discriminator output provides drive capability for the signal output to recording or readout devices.

The discriminator is operated in a local mode or remote mode. In the local mode, front-panel controls select all operating parameters for the subcarrier channels. These controls include center-frequency selection, deviation selection, data-cutoff frequency, sense, and output-filter response. In the remote mode, the operating parameters for subcarrier channels are selected by a remote control device, such as an EMR Model 4141 Programmer.

An internal power supply operates from a primary power input to generate all voltages for discriminator operation.

1.3 PHYSICAL DESCRIPTION

The EMR Model 4142 PBW Tunable Discriminator is a self-contained unit, 20-1/4 inches in overall depth, designed for mounting in a standard 19-inch equipment rack. The discriminator is 5-1/4 inches high and 19-inches wide, including the mounting slides. Tilting or nontilting side-mounting slides are provided for mounting the discriminator in the equipment rack.

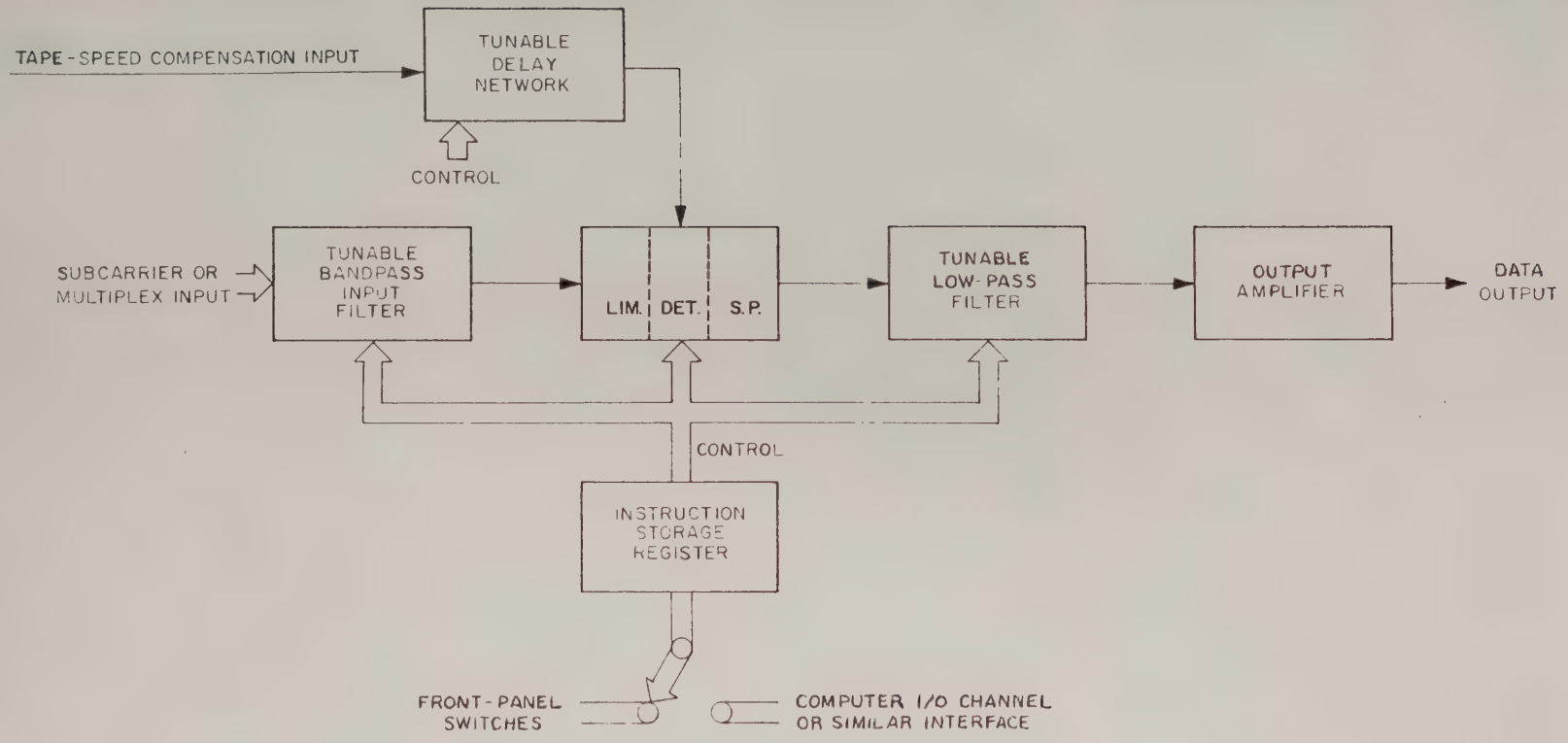

Figure 1-1. Model 4142 PBW Tunable Discriminator Simplified Block Diagram

The discriminator consists of four major assemblies as shown in Figure 1-2. These assemblies are identified by assembly designations A1 through A4 as follows:

A1 -- Front panel/subpanel
A2 -- Card tray
A3 -- Rear panel
A4 -- Power supply

The front panel/subpanel, A1, is a two-segment assembly in which all operating controls, indicators, and monitor jacks are mounted directly to the subpanel and extend through precut openings in the front panel. Also, the front panel/subpanel contains turn-to-lock catches used to secure the discriminator in the mounting rack.

The card-tray assembly, A2, mounts all plug-in printed-circuit cards in the discriminator chassis. Access to this assembly is obtained by releasing the quick-disconnect fasteners in the top cover of the discriminator and removing the cover. Cam-operated ejectors on both ends of the printed-circuit cards facilitate their removal from the card-tray locations. Provisions for up to 15 printed-circuit cards are provided; however, the number of cards will vary depending on the particular discriminator configuration. The maximum card-tray printed-circuit card complement is shown in Figure 1-3 and described in Table 1-1. All wiring to the printed-circuit cards in the card tray is terminated at an associated mating receptacle in the bottom of each card location.

The rear-panel assembly, A3, contains electrical connectors for all input and output connections to the discriminator. A twist-lock power plug is provided for AC power input to the discriminator power supply. A rear-panel five-ampere fuse, connected in series with the AC power input, provides protection from the AC power source. Internal cooling is provided by a blower mounted vertically on the inside of the rear panel. The blower draws cooling air in through a screen on the opposite side of the rear panel and discharges the air through the blower opening.

The power-supply assembly, A4, provides all DC voltages necessary for discriminator operation. The power supply is located adjacent to the card-tray assembly in the middle section of the discriminator. Access to the power supply is gained by releasing the quick-disconnect fasteners in the discriminator top cover and removing the top cover. AC power wiring to the power supply is routed from the twist-lock power plug on the rear panel through a rear-panel fuse and front-panel power switch to the power-supply power components.

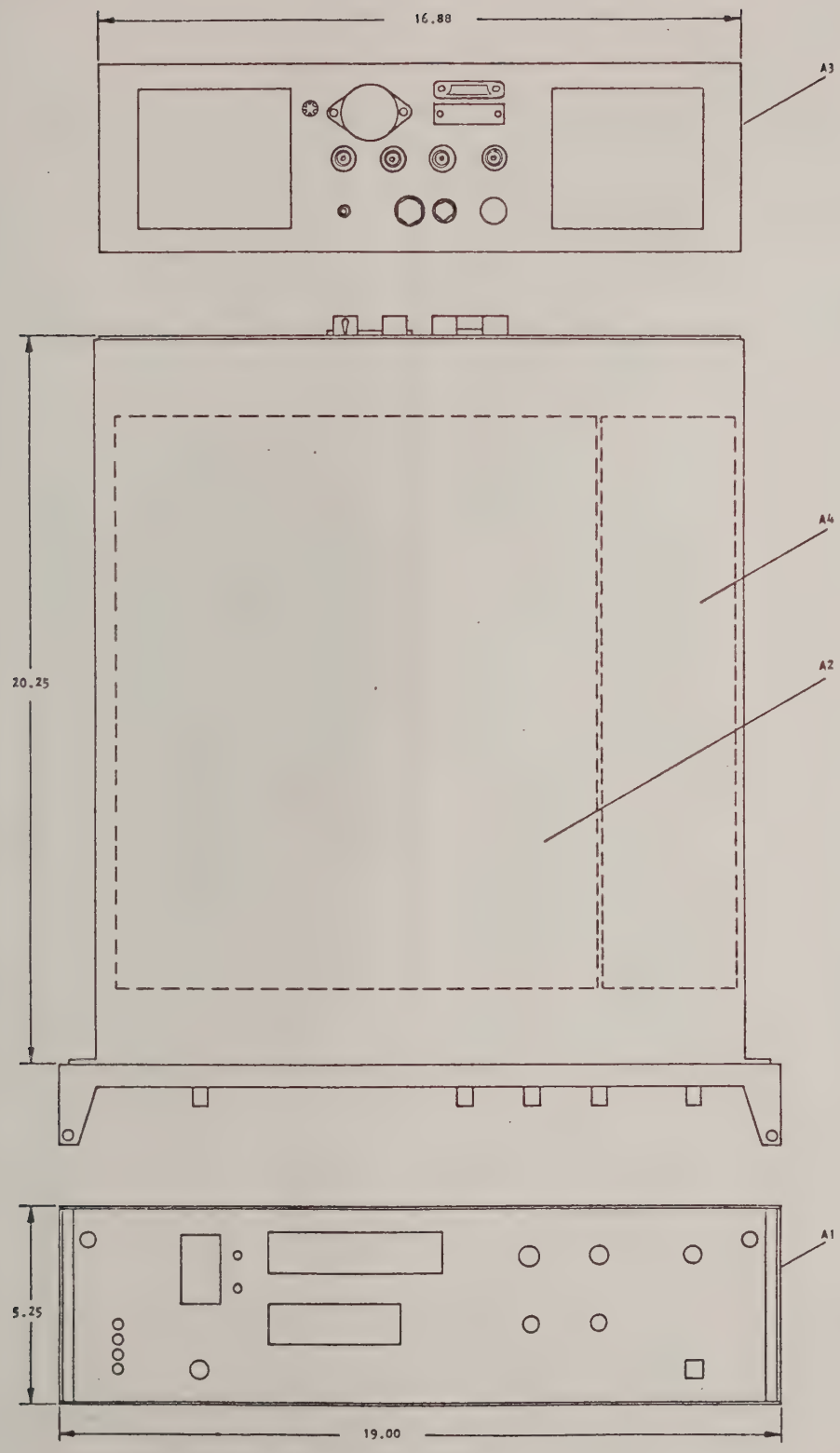

NOTE: Made from Dwg. Control No. 4140-001

Figure 1-2. EMR Model 4142 PBW Tunable Discriminator Major Assemblies

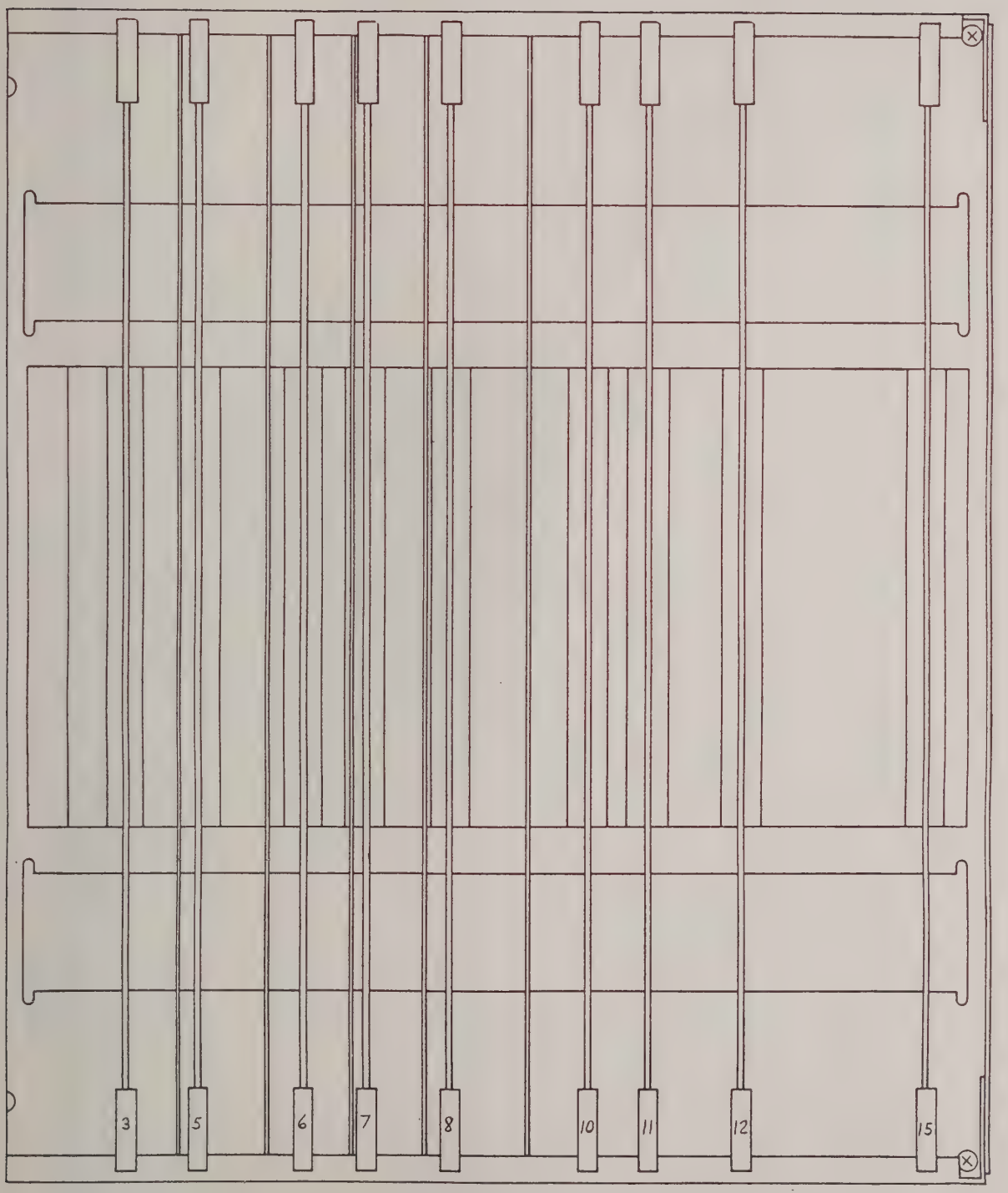

NOTE: Made From EMR Dwg. No. 17676, Rev. A.

Figure 1-3. Card File Assembly A2 Printed-Wiring Card Complement

Table 1-1. Card File Chassis, A2, Printed-Wiring Card Descriptions

DESIG.	NAME	FUNCTION	APPLICATION
A2A1	Extender Card	Used to extend other printed-wiring cards from normal operating positions for test and maintenance.	All models
A2A2	Not used		
A2A3	Input Printed-Wiring Card	Contains components for the input amplifier circuit, isolation amplifiers, and subcarrier amplitude meter circuit.	All models
A2A4	Not used		
A2A5	BPIF No. 1 Printed-Wiring Card	Contains components for first section of the tunable band-pass input filter.	All models
A2A6	BPIF No. 2 Printed-Wiring Card	Contains components for the second section of the tunable band-pass input filter.	All models
A2A7	Tape-Speed Compensation Printed-Wiring Card	Contains components for the tape-speed compensation circuit.	Models 4142-02, -04, and -06
A2A8	Limiter, Detector, and Single Pole Printed-Wiring Card	Contains circuits which demodulate intelligence data from subcarrier input.	All models
A2A9	Not used		
A2A10	Pole Pair Printed-Wiring Card	Contains components of tunable low-pass output filter circuit.	Models 4142-05 and -06

Table 1-1 (Cont'd.). Card File Chassis, A2, Printed-Wiring Card Descriptions

DESIG.	NAME	FUNCTION	APPLICATION
A2A11	Pole Pair Printed-Wiring Card	Contains components of tunable low-pass output filter circuit.	Models 4142-03, -04, -05, and -06
A2A12	Pole Pair Printed-Wiring Card	Contains components for tunable low-pass output filter circuit.	All models
A2A13	Not used		
A2A14	Not used		
A2A15	Regulator and Output Amplifier Printed-Wiring Card	Contains power supply regulators and output amplifier circuits.	All models

SECTION 2

SPECIFICATIONS

2.1 GENERAL

This section outlines the electrical and mechanical specifications for the EMR Model 4142 PBW Tunable Discriminator. Figure 2-1 of this section identifies the ordering information for various configurations of the Model 4142.

2.2 ELECTRICAL SPECIFICATIONS

2.2.1 Input Characteristics

a. Center Frequency: Any subcarrier frequency between 100 Hz and 1.50 MHz is programmable in three significant digits. Tracking over any decade is within ±1% of full bandwidth output.

b. Deviation: Deviations of ±7.5%, ±15%, ±20%, ±30%, and ±40% are standard.

NOTE

The ±30% and ±40% deviations share a 35% BPIF.

c. Data Cutoff Frequencies: Programmable from 04.0 Hz to 300 kHz by either front panel or remote controls.

NOTE

The filter is programmable to 1 MHz; however, performance characteristics stated in this data sheet are specified only to 300 kHz.

d. Attenuation at Selected Cutoff Frequency:

1. With Constant Amplitude (CA) Response:

(a) Down 0.5 db ±0.5 db at programmed frequencies up to 100 kHz.

(b) Down 0.5 db ±1.0 db at programmed frequencies above 100 kHz.

2. With Constant Delay (CD) Response:

(a) Down 3.0 db ±0.5 db at programmed frequencies up to 100 kHz.

(b) Down 3.0 db ±1.0 db at programmed frequencies above 100 kHz.

e. Input Impedance: Greater than 100K ohms shunted by no more than 30 picofarads.

f. Signal Amplitude: Subcarrier levels from 10 millivolts to 5 volts rms (54 db). The maximum composite input signal is 10 volts peak.

g. Amplitude Modulation Rejection: With a deviation ratio of five (5), a 20 db step of input amplitude at center frequency, anywhere within the dynamic input range, causes a peak transient of less than 1% of bandwidth.

h. Rejection of Unwanted Signals: Full scale modulation of an adjacent 7.5% deviation IRIG channel will cause an rms error of not more than 0.2% of bandwidth even when the amplitude of the interferring signal is equal to the desired signal.

2.2.2 Output Characteristics

a. Output Impedance: Not more than 1 ohm for frequencies up to 10 kHz and increasing linearly to a maximum of 10 ohms at 300 kHz.

b. Output Amplitude: Single-ended and referenced to ground. The output polarity is programmable. The output voltage is adjustable between 0 ±0.5 and ±(10.5 ±0.3) volts for full scale deviation with front panel control. Output voltage is limited to approximately ±13 volts peak.

c. Current: Peak current limited; 100 milliamperes minimum, 140 milliamperes maximum from DC to 300 kHz.

d. Loading: Any capacitive load up to 0.01 microfarad provided peak current capability is not exceeded. A short circuit on the output will not damage the unit.

e. Total Harmonic Distortion: For deviation ratios of 5 or greater, the harmonic distortion for bandedge-to-bandedge modulation of any IRIG channel is less than 1.0% for any modulation frequency up to the channel cutoff frequency.

f. RMS Output Noise: Not greater than 0.1% of full bandwidth at a deviation ratio of 5 or greater when using a seven-pole, CA, low-pass output filter. Not greater than 0.3% of full bandwidth at a deviation ratio of 2 or greater when using a seven-pole, CA, low-pass output filter.

g. Nonlinearity: Not greater than ±0.05% best straight line for all deviations and center frequencies equal to or less than 500 kHz. Not greater than ±0.15% for deviations and center frequencies above 500 kHz.

h. Output Zero Stability: Zero drift not greater than ±0.15% of full bandwidth in a 15-hour period after a 30-minute warmup at a constant (±3°C) ambient temperature. Drift not greater than ±0.5% of full bandwidth output throughout the operating temperature range of +10° to +50°C.

i. Deviation Sensitivity Stability: Not more than ±0.05% of full bandwidth variation (±10 mv) in a 15-hour period after a 30-minute warmup at constant (±3°C) ambient temperature.

j. Data Response: Constant amplitude (CA) or constant delay (CD) output response selectable by either front panel controls or remote programming. Cutoff characteristic asymptotically approaches 18, 30, or 42 db/octave beyond cutoff, depending upon filter type (three-, five-, or seven-pole).

k. Line-Voltage Sensitivity: A 10-volt change in line voltage anywhere between 105 and 132 volts causes an error of not more than 0.1% of bandwidth at the discriminator output.

l. Tape-Speed Compensation - Models 4142-02, -04, and -06: For any IRIG subcarrier, the wow-and-flutter improvement ratio is 26 db for tape-speed variations as large as ±3% up to the channel cutoff frequency at a deviation ratio of 5. For all center frequencies above 200 KHz and for any ±20%, ±30%, and ±40% deviations, tape-speed improvement will

be a minimum 18 db. An internal delay network is automatically controlled by the center frequency and deviation settings to match the band-pass filter delay. The TSC input normally accepts a positive sense with a sensitivity of 10 volts peak for ±7.5% deviation. Negative sense may be obtained by internal jumpers.

2.3 MECHANICAL SPECIFICATIONS

a. Panel Size: 5-1/4 inches (13.3 cm) high by 19 inches (48.2 cm) wide.

b. Depth: 20 inches (50.8 cm) excluding projections from front panel.

c. Weight: Net, 55 pounds (25 kg); shipping, 100 pounds (45.4 kg).

d. Mounting: May be equipped for slide mounting in a standard 19-inch EIA-type equipment rack. (Refer to Figure 2-1 for various slide mounting configurations.)

e. Paint Finish: Various semigloss baking enamel colors and letter combinations are available. (Refer to Figure 2-1 for color information.)

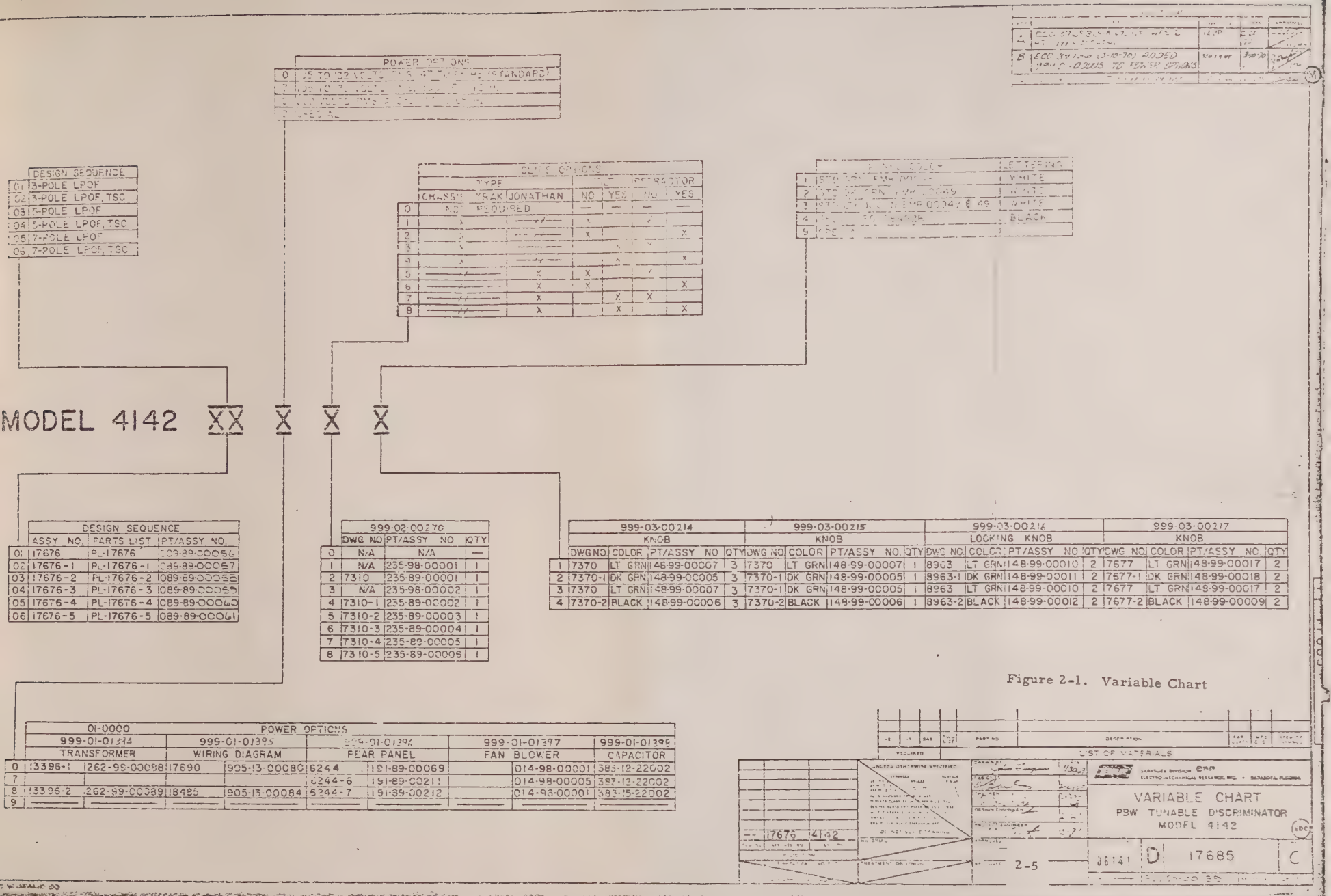

Figure 2-1. Variable Chart

SECTION 3

INSTALLATION AND OPERATION

3.1 INSTALLATION

The EMR Model 4142 PBW Tunable Discriminator is shipped completely assembled and ready for installation. The unit is calibrated and adjusted prior to shipment, and all plug-in printed-wiring cards inserted into the appropriate receptacles and all covers are installed. The unit should be inspected immediately on its arrival and notice given to EMR-Telemetry of any claim that the product does not conform with the terms of the order.

The Model 4142 may be ordered with or without mounting slides. (Refer to paragraph 2.3 (d) for the various mounting configurations.) Units without slide mounts may be bolted directly to a standard 19-inch equipment rack with the hardware provided for that purpose. For installation of a Model 4142 with slide mounts, remove the slides from the discriminator after unpacking the unit and mount the slides to the internal frame of the equipment rack. Mounting hardware for this installation is supplied with the discriminator. Insert the discriminator into the slides until the unit is firmly seated. Turn-to-lock fasteners located on either side of the discriminator front panel secure the unit in the rack.

The discriminator may be extended from the equipment rack for servicing by loosening the front panel turn-to-lock fasteners and pulling the unit straight out. Pushbutton stop latches, located on the outside surfaces of both slides, hold the unit at the maximum extension. At this point, the discriminator may be removed from the rack by depressing the pushbutton stop latches and pulling the unit straight out.

The external electrical connections to the discriminator are terminated at connectors on the rear panel. These connectors and other rear-panel components are illustrated in Figure 3-1 and described in Table 3-1.

3.2 OPERATION

3.2.1 Local Mode of Operation

In the local mode of operation, the operating parameters for the Model 4142 are selected by front-panel controls. After energizing the unit and selecting the desired operating parameters, the discriminator is fully automatic until a new set of parameters are required. Front panel indicators and test jacks are provided for monitoring discriminator performance. The front panel controls, indicators, and test jacks are identified in Figure 3-2 and described functionally in Table 3-2. Preoperational adjustment procedures and typical operational setup procedures are outlined in the following paragraphs.

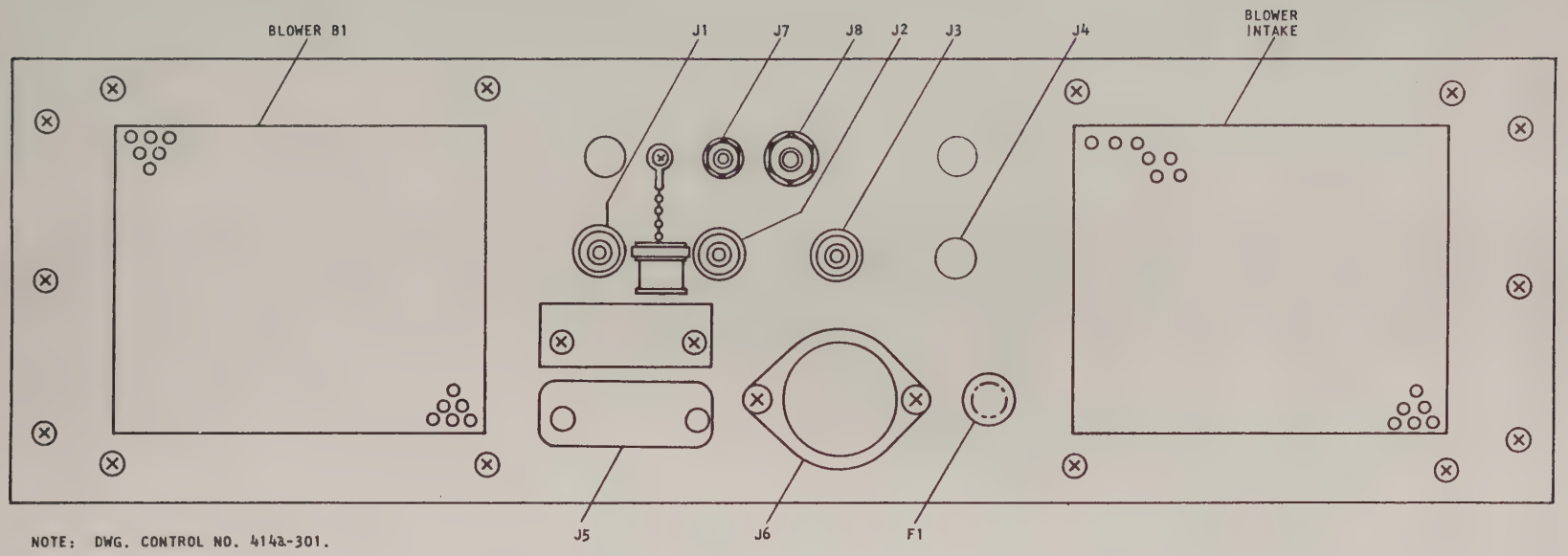

Figure 3-1. Model 4142 PBW Tunable Discriminator Rear Panel Configuration

Table 3-1. Model 4142 PBW Tunable Discriminator
Function of Rear-Panel Connectors (Ref. Figure 3-1)

DESIG.	NAME	TYPE	FUNCTION
A3J1	OUTPUT	BNC	Discriminator data output.
A3J2	TSC	BNC	Tape-speed-compensation input.
A3J3	INPUT	BNC	FM subcarrier multiplex input.
A3J4	------	----	Not used.
A3J5	REMOTE CONTROL	Amphenol	Used for remotely programming discriminator operating parameters. For pin-function listing and remote-programming instructions, refer to paragraph 3.2.2.
A3J6	POWER	Hubbell Twist-lock	AC power input connection to discriminator power supply.
A3J7	CASE GND	Binding Post	Chassis ground.
A3J8	SIG GND	Binding Post	Signal ground

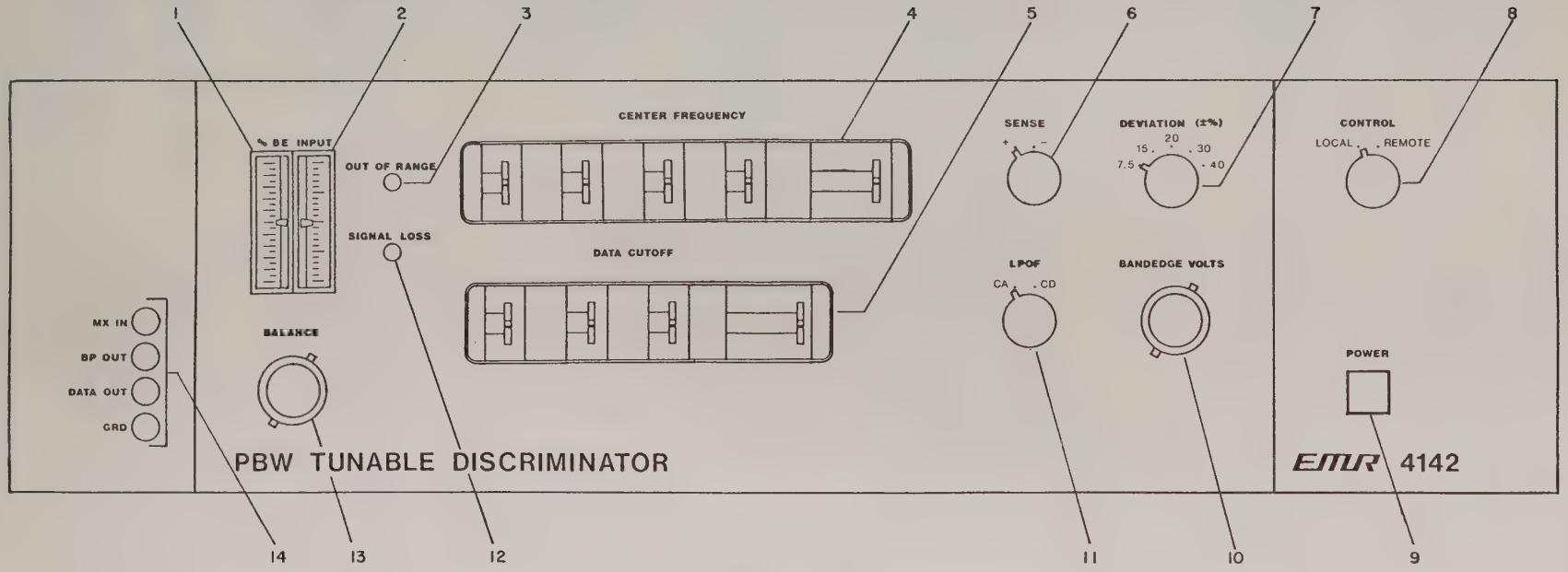

DRAWING CONTROL NO. 4142-302

Figure 3-2. Front Panel Assembly (A1) Operating Controls, Indicators, and Test Points

Table 3-2. Function of Front Panel Controls and Indicators
(Ref. Figure 3-2)

REF. NO.	NAME	DESIG-NATION	FUNCTION
1	% BE meter	M2	Display percentage of subcarrier signal deviation from center frequency to either bandedge.
2	INPUT meter	M1	Display amplitude of selected subcarrier input signal. A nonlinear meter scale eliminates range switching.
3	OUT-OF-RANGE indicator	DS5	The lamp lights when the incoming subcarrier frequency is sufficiently above or below the prescribed bandedge for the selected center frequency and deviation. The output is clamped to any desired voltage between ±11 volts.
4	CENTER FREQUENCY switches	S3 thru S7, DS1, DS9, and DS10	Four thumbwheel switches (S4 through S7) provide for selection of subcarrier center frequencies of 100 Hz to 1500 kHz. The most significant digit is normally set to zero and is only used for frequencies of 1000.kHz and higher. The fifth thumbwheel switch, S3, provides for selection, and illumination, of the proper decimal point location to provide a direct readout.
5	DATA CUTOFF switches and decimal point indicators	S9 thru S12, and DS2, DS3, and DS4	Three thumbwheel switches provide for selection of a data cutoff frequency of from 4 Hz to 300 kHz. A fourth thumbwheel switch provides for selection, and illumination, of the proper decimal point location.
6	SENSE switch	S14	Provides selection of positive or negative deviation sense.

Table 3-2 (Cont'd.). Function of Front Panel Controls and Indicators (Ref. Figure 3-2)

REF. NO.	NAME	DESIG-NATION	FUNCTION
7	DEVIATION (±%) switch	S2	Provides for selection of one of five deviation limits (±7.5%, ±15%, ±20%, ±30%, or ±40%) for selected center frequency signal.
8	CONTROL LOCAL/ REMOTE switch	S1	Provides for controlling operating parameters of the Model 4142 from either the front panel of the unit (LOCAL) or from an external device (REMOTE) by grounding appropriate input leads at a rear panel connector.
9	POWER pushbutton switch	S13	Controls application of primary power to the unit. When power is applied, POWER switch is illuminated.
10	BANDEDGE VOLTS potentiometer	R1	Provides for adjustment of data output voltage from ±0.1 to ±10 volts for full bandedge-to-bandedge deviation.
11	LPOF CA/CD switch	S8	Provides for selection of either constant amplitude (CA) or constant delay (CD) output filter response characteristics.
12	SIGNAL LOSS lamp	DS8	When the input signal amplitude is less than a predetermined level, a front-panel lamp lights and the output is clamped to any desired voltage between ±11 volts. The clamp level is normally preset for zero volts at the factory. Signal-loss level is adjustable up to at least 50 mv rms and is normally adjusted at the factory to 10 mv rms at band center. The signal-loss clamp circuit has slow attack and fast release times to provide optimum performance during tape dropout or rapid signal fading.

Table 3-2 (Cont'd.). Function of Front Panel Controls and Indicators (Ref. Figure 3-2)

REF. NO.	NAME	DESIG-NATION	FUNCTION
13	BALANCE potentiometer	R2	Provides for adjusting discriminator data output to a zero volt level with a center frequency subcarrier input signal.
14	Test jacks:		
	MX IN	TP4	Multiplex input.
	BP OUT	TP3	Subcarrier signal at output of the band-pass filter.
	DATA OUT	TP2	Discriminator data output.
	GRD	TP1	Ground.

3.2.1.1 Initial Checks and Adjustments

Normally, the only adjustment required prior to initial operation of the Model 4142 is adjustment of the front panel BANDEDGE VOLTS control. The bandedge voltage adjustment need be made only once and will not change with the selection of another subcarrier channel or selection of another deviation-sensitivity setting. The balance and bandedge voltage adjustments are accomplished as follows:

a. Depress the front panel POWER switch A1S13 to apply power to the Model 4142 (POWER indicator should be lit).

NOTE

Allow a 30-minute warmup period before proceeding.

b. Connect an external signal generator (Hewlett-Packard 200CD or equivalent) tuned for an output signal frequency of 100 kHz to the rear panel INPUT connector, A3J3, and connect the grounding cap to TSC connector A3J2.

c. Position the front panel controls as follows:

Control	Position
CENTER FREQUENCY switches A1S3 through A1S7	0100. kHz
CONTROL switch A1S1	LOCAL

d. Connect a Fluke Model 825A DC voltmeter to DATA OUT test jack TP2 on the front panel. The DC voltmeter should indicate 0 ±200 millivolts and the front panel % BE meter, A1M2, should indicate zero deviation.

NOTE

If the center frequency balance indication is abnormal, perform the checkout and adjustment procedures outlined in Section 5.

e. Position the front panel DEVIATION (±%) switch A1S2 to the desired deviation range (7.5, 15, 20, 30, or 40).

f. Tune the external signal generator so that the input test signal represents upper bandedge deviation. For example, if the deviation range of ±20% is selected, tune the signal generator for 120 kHz.

g. Connect the DC voltmeter to DATA OUT test jack TP2 on the front panel and adjust BANDEDGE VOLTS potentiometer A1R1 for the desired bandedge voltage indication (0.1 to 10.0 volts).

3.2.1.2 Typical Operational Setup Procedure

The following procedure is to be used as a guide for setting the operating parameters for the Model 4142:

a. Apply power to the Model 4142 and allow a 30-minute warmup period.

b. Connect the FM subcarrier multiplex input to the discriminator rear-panel INPUT jack A3J3.

c. Position the front-panel SENSE switch S14 to negative (–) or positive (+) as required. In the (–) position, an increase in signal-input frequency will result in a negative-going discriminator output voltage. In the (+) position, an increase in signal-input frequency will result in a positive-going discriminator output voltage.

d. Position the front-panel CONTROL switch S1 to LOCAL.

e. Position the front-panel DEVIATION (±%) switch S2 to the required position.

f. Position the front-panel CENTER FREQUENCY thumbwheel switches to the significant digits of the selected center frequency. (Always use MSD-1 position for frequency settings up to 999 kHz. Use MSD position above 999 kHz.)

g. Position the front-panel DATA CUTOFF thumbwheel switches to the significant digits of the selected data-cutoff frequency. (Always use MSD position for frequency settings of 10 Hz and above. Use MSD-1 position below 10 Hz.)

h. Position the front-panel LPOF switch S8 to CA or CD as required. (The CA position is recommended for analog-type data outputs and the CD position is recommended for pulse-type data outputs.)

3.2.2 Remote Mode of Operation

In the remote mode of operation, the discriminator operating parameters are selected by applying external input signals to control lines at the rear-panel REMOTE CONTROL connector A3J5. These input signals are in the form of ground level (0-volt) inputs at the appropriate pins to select each operating point.

To place the discriminator under remote control, position the front-panel CONTROL switch, S1, to REMOTE. This disables all local controls except the POWER pushbutton switch, the BANDEDGE VOLTS control, and the BALANCE control. The bandedge voltage is adjusted while under local control, and when switching to remote control, this setting will remain constant throughout the entire operating range of the discriminator.

The operating points and program instructions are contained in Table 3-3. The rear-panel REMOTE CONTROL connector and pin-location diagram is shown in Figure 3-3. Table 3-3 identifies pin functions.

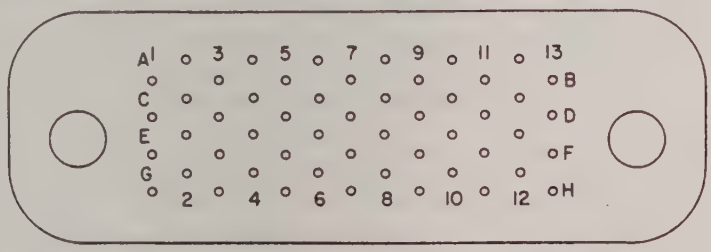

Figure 3-3. REMOTE CONTROL Connector A3J5 Pin-Location Diagram

3.2.3 Tape-Speed Compensation (TSC) System

The discriminator may be used in a tape-speed compensation (TSC) system connected as is shown in Figure 3-4. This system requires a reference discriminator and a signal delay unit to be used in conjunction with the Model 4142 Discriminator.

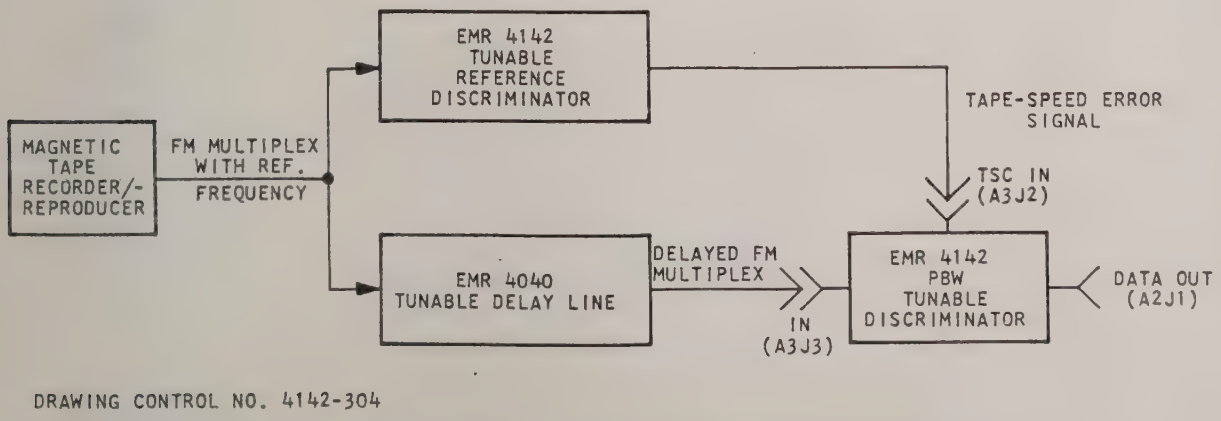

Figure 3-4. Tape-Speed Compensation System Block Diagram

Table 3-3. Remote Control Programming Instructions
(Ref. Figure 3-3)

Operating Parameter To Be Selected	Program Instruction (Input At Rear Panel REMOTE CONTROL Connector A3J5)
Center Frequency Digits	
Most Significant Digit Digit 1 (MSD)	
1	Ground Pin F13
0	Pin F13 Open
Digit 2	
0	Pins A6, B5, A8, and B7 Open
1	Ground Pin B7
2	Ground Pin A8
3	Ground Pins A8 and B7
4	Ground Pin B5
5	Ground Pins B5 and B7
6	Ground Pins B5 and A8
7	Ground Pins B5, A8, and B7
8	Ground Pin A6
9	Ground Pins A6 and B7
Digit 3	
0	Pins A10, B9, A12, and B11 Open
1	Ground Pin B11
2	Ground Pin A12
3	Ground Pins A12 and B11
4	Ground Pin B9
5	Ground Pins B9 and B11
6	Ground Pins B9 and A12
7	Ground Pins B9, A12, and B11
8	Ground Pin A10
9	Ground Pins A10 and B11
Digit 4	
0	Pins D13, B13, C2, and D1 Open
1	Ground Pin D1
2	Ground Pin C2
3	Ground Pins C2 and D1
4	Ground Pin B13
5	Ground Pins B13 and D1
6	Ground Pins B13 and C2
7	Ground Pins B13, C2, and D1
8	Ground Pin D13
9	Ground Pins D13 and D1

Table 3-3 (Cont'd.). Remote Control Programming Instructions
(Ref. Figure 3-3)

Operating Parameter To Be Selected	Program Instruction (Input At Rear Panel REMOTE CONTROL Connector A3J5)
Center Frequency Digits (Cont'd.)	
Multiplier	
100.0 kHz	Ground Pin B3
10.0 kHz	Ground Pin A4
1.0 kHz	Ground Pin B1
100 Hz	Ground Pin A2
Deviation Range	
±7.5%	Ground Pin C4
±15%	Ground Pin D3
±20%	Ground Pin E4
±30%	Ground Pin C6
±40%	Ground Pin D5
Data Cutoff Digits	
MSD = 1	Ground Pin D9
2	Ground Pin C10
3	Ground Pins C10 and D9
4	Ground Pin D7
5	Ground Pins D7 and D9
6	Ground Pins D7 and C10
7	Ground Pins D7, C10, and D9
8	Ground Pin C8
9	Ground Pins C8 and D9
0	Pins C8, D7, C10, and D9 Open
Digit 2 = 1	Ground Pin F1
2	Ground Pin E2
3	Ground Pins E2 and F1
4	Ground Pin D11
5	Ground Pins D11 and F1
6	Ground Pins D11 and E2
7	Ground Pins D11, E2, and F1
8	Ground Pin C12
9	Ground Pins C12 and F1
0	Pins C12, D11, E2, and F1
LSD = 0 through 4	Ground Pin F3
5 through 9	Pin F3 Open

Table 3-3 (Cont'd.). Remote Control Programming Instructions
(Ref. Figure 3-3)

Operating Parameter To Be Selected	Program Instruction (Input At Rear Panel REMOTE CONTROL Connector A3J5)
Data Cutoff Multiplier	
1 Hz (XX.X)	Ground Pin F9
100 Hz (XX.X)	Ground Pin E12
.1 kHz (XXX.)	Ground Pin H13
10 kHz (X.XX)	Ground Pin F11
100 kHz (XXX.)	Ground Pin E10
Response Characteristic	
CA	Ground Pin F7
CD	Ground Pin E8
	NOTE Pins G2 and H1 are signal ground.

In this system, the prerecorded FM multiplex is applied to a reference discriminator and a signal delay unit. The reference discriminator accepts the reference frequency from the FM multiplex and detects any reference frequency modulation incurred during the recording or playback process. Any reference-frequency modulation results in a tape-speed error signal at the reference discriminator output.

The signal delay unit delays the FM multiplex an amount equal to the delay in the reference discriminator. The delayed FM multiplex and the tape-speed error signal are then applied to the Model 4142 via connectors A3J3 and A3J2, respectively. A band-pass input filter in the Model 4142 extracts the subcarrier channel from the FM multiplex and an FM detector detects the data in that channel.

If tape-speed variations have occurred, these variations result in erroneous subcarrier modulations and would be detected as data in that subcarrier channel. However, the tape-speed error signal affects tuning of the discriminator in such a way as to compensate for the erroneous modulations and only the true subcarrier channel data is applied to the Model 4142 data output.

If TSC is not used, the TSC input A3J2 must be shorted to ground. A shorting cap is attached to the discriminator rear panel for this purpose.

A positive or negative sense reference discriminator may be used for the 4142. A jumper is included on the TSC card to select the appropriate sense (see paragraph 4.3.4). When a positive sense reference discriminator is used, the E1 to E2 connection is made. Since the EMR reference discriminators are normally positive sense, the E1 to E2 connection is normally made. When a negative sense reference discriminator is to be used, the jumper must be moved to connect E1 and E3.

SECTION 4

THEORY OF OPERATION

4.1 GENERAL

This section contains the functional theory of operation for the Model 4142 Proportional Bandwidth Tunable Discriminator. The theory discussions are presented at two levels. A general theory of operation, referenced to the overall system block diagram shown in Figure 4-1, is provided in paragraph 4.2. Detailed descriptions of the functional circuit groups identified on Figure 4-1 are provided in paragraph 4.3. The assembly and schematic diagrams for the Model 4142 are provided in Section 5 of this manual for reference and maintenance purposes.

4.2 GENERAL THEORY OF OPERATION

The Model 4142 accepts an FM multiplex of subcarrier channels in the input frequency range of 100 Hz and 1500.kHz, extracts a selected channel from the multiplex, demodulates the intelligence data contained in the selected channel by pulse-averaging detection, and presents the intelligence data at the discriminator output in the form of a varying analog voltage.

As shown in Figure 4-1, the Model 4142 is composed of the following six functional circuit groups: programming control, input control and band-pass, FM detection, tape-speed compensation, LPOF and output amplifier, and DC power circuits. The programming control circuit group is composed of front panel CONTROL/LOCAL-REMOTE switch A1S1, CENTER FREQUENCY switches A1S3 through A1S7, DEVIATION (±%) switch A1S2, LPOF switch A1S8, DATA CUTOFF switches A1S9 through A1S12, and SENSE switch A1S14. The function of this circuit group is to provide the means for establishing the operating parameters of the Model 4142 (center frequency, deviation, polarity sense, output response characteristic, and data cutoff frequency) from either local or remote sources.

The FM multiplex of subcarrier signals is applied to the input control and band-pass circuit group which is composed of input card A2A3, BPIF section 1 card A2A5, BPIF section 2 card A2A6, and front panel INPUT meter A1M1, SIGNAL LOSS indicator A1DS7 and OUT-OF-RANGE indicator A1DS5. The input card contains amplification stages for providing the proper terminating impedance for the input multiplex and for isolation between sections of the band-pass input filter, and high frequency feedback amplifiers between poles on each section. Card A2A3 also contains a zero-signal detector and an out-of-range detector. The zero-signal detector senses the input multiplex for conditions where the signal amplitude is sufficiently low (nominally less than 10 millivolts) as to possibly result in erroneous data at the discriminator output. The out-of-range detector senses for conditions in which the incoming subcarrier signal

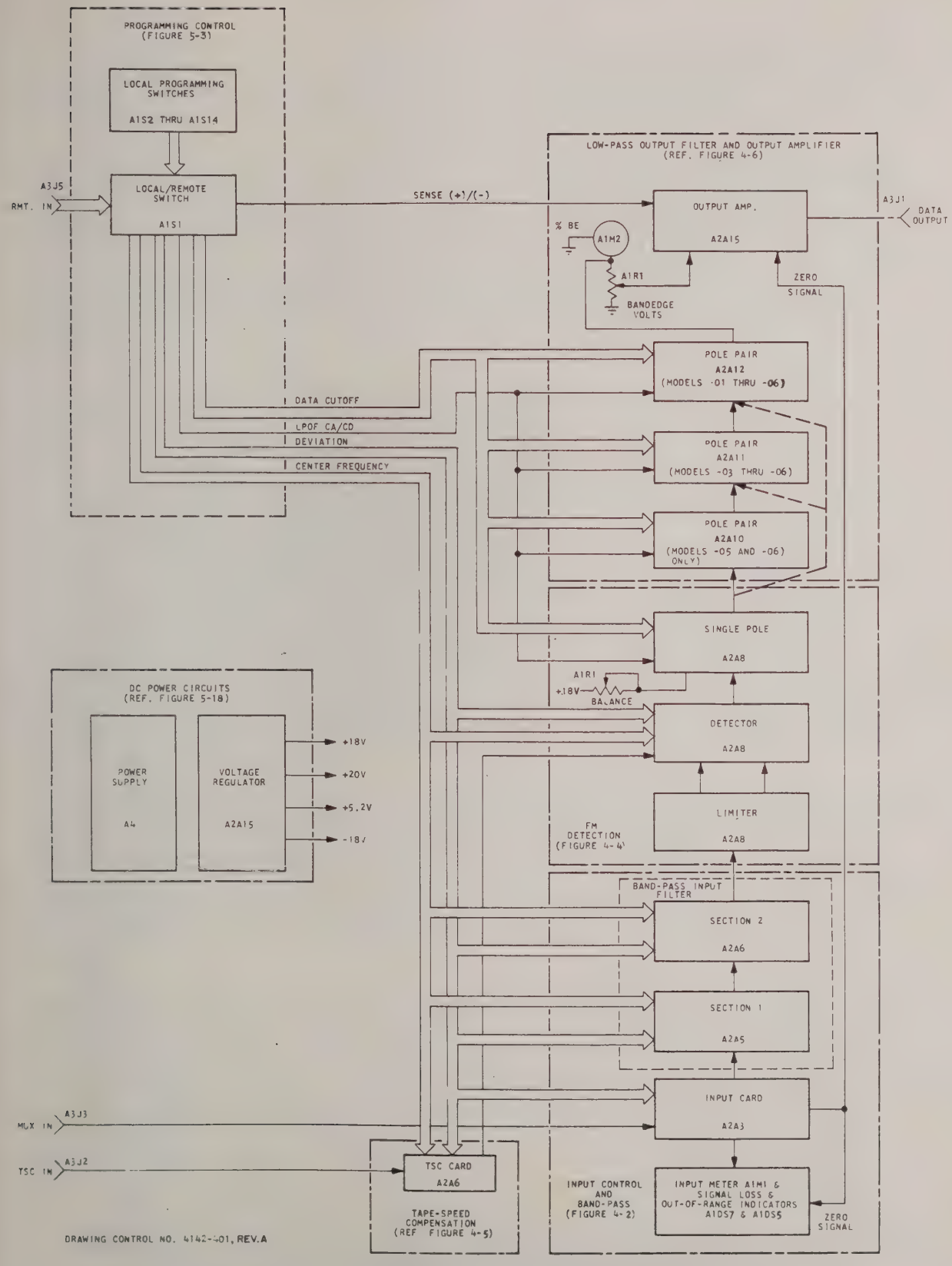

Figure 4-1. Model 4142 Functional Block Diagram

is operating at a frequency above or below the bandedge frequency of the programmed subcarrier channel. Detection of either of these conditions results in the discriminator output being clamped at a predetermined level.

In addition to the isolation amplifiers on card A2A3, the band-pass input filter contains two individual sections. The first BPIF section, card A2A5, contains two poles which operate as a band-pass filter. The second BPIF section, card A2A6, also contains two poles but operates as a low-pass filter. The two sections are connected in series to obtain the desired composite response. The programmed center frequency and deviation parameters allow appropriate relays in the BPIF to be energized for tuning the required BPIF frequency response.

The selected subcarrier channel output is applied to the FM detection circuit group consisting of a four-stage high gain limiter, a pulse-averaging FM detector, and a single-pole circuit, each of which are located on card A2A8. The primary function of the limiter is to convert the subcarrier signal to a substantially constant-amplitude square wave which is applied in complementary form to the detector. The FM detector used in the Model 4142 is a current operating device in which the output current is proportional to subcarrier signal deviation. The single-pole circuit, although being the first stage of the low-pass output filter, is discussed as part of the FM detection group since it is also a current referenced circuit. This circuit consists of an RC network tunable for a specific data cutoff frequency and two tunable amplifier stages. The output of the single-pole circuit, a voltage oriented signal, is applied to the low-pass output filter circuit. Front panel BALANCE potentiometer A1R2 provides for calibrating the discriminator output for zero volts when the subcarrier input is operating at center frequency.

In discriminator units containing tape-speed compensation capabilities (Models 4142-02, -04, and -06), a tape-speed error signal received from a remote device is applied to a tunable delay network on TSC card A2A6. The tape-speed error signal is delayed an amount equal to the delay encountered by the subcarrier input processed through the BPIF. The error signal is then applied to the detector circuit to compensate for tape-speed variations on the input signal.

One of three low-pass output filter configurations (three-pole, five-pole, and seven-pole) is available in Model 4142 discriminators for rolloff characteristics of 18 db, 30 db, or 42 db per octive, respectively. The LPOF, which passes only the intelligence data in the selected subcarrier channel, is program tunable for a data cutoff frequency of 4.0 Hz to 300 kHz. The output filter response characteristic (constant amplitude or constant delay) is also programmable. The LPOF output is coupled through BANDEDGE VOLTS control A1R1 to the output amplifier circuit on card A2A15 and is also applied to the front panel % BE meter, A1M2, which provides a relative indication of the magnitude and direction of the subcarrier deviation. The output amplifier provides the current and voltage drive capability for output recording and readout devices. The discriminator output voltage, representing bandedge of a selected subcarrier

channel, is adjustable by means of the BANDEDGE VOLTS control. The output from the output amplifier circuit is applied to the rear panel OUTPUT connector, A3J1, and to the front panel DATA OUT test jack, A1TP2.

The DC power circuits group provides the primary DC operating voltages for the Model 4142 discriminator. The DC power circuits consist of power supply assembly A4; the +18 volt, +20 volt, +5.2 volt, and −18 volt regulators located on card A2J15.

4.3 DETAILED THEORY OF OPERATION

The following paragraphs provide detailed descriptions of the functional circuit groups identified in paragraph 4.2.

4.3.1 Programming Control (Ref. Figure 5-3)

The programming control function is composed of the front panel control switches which initiate and/or distribute the command signals that establish the operating parameters for the Model 4142. The front panel switches which comprise the programming control function consist of CONTROL LOCAL/REMOTE switch A1S1, DEVIATION (±%) switch A1S2, CENTER FREQUENCY switches A1S3 through A1S7, LPOF switch A1S8, DATA CUTOFF switches A1S9 through A1S12, and SENSE switch A1S14. The CONTROL switch determines if the Model 4142 is under control of the front panel switches or a remote device such as the EMR Model 4141 Programmer. With the CONTROL switch in the LOCAL position, relay control signals (ground level DC returns or "opens"), as established by the positioning of switches A1S2 through A1S12 and A1S14, are routed through contacts of the CONTROL switch to applicable functional circuit groups. In the REMOTE position, the relay control signals are initiated by an external device and routed to the appropriate functional circuits. The purpose of individual control switches is defined in Table 3-2.

4.3.2 Input Control Function (Ref. Figure 4-2)

The input control circuit group is composed of all circuits contained on input card A2A3 and the band-pass input filter (BPIF) consisting of cards A2A5 and A2A6. The function of this circuit group is to extract a selected subcarrier channel from an input multiplex of input signals. In addition to the band-pass function, this circuit group also provides circuits for zero signal detection, front panel INPUT meter control, and out-of-range detection. The functional operation of each circuit is provided in the following paragraphs.

4.3.2.1 Band-Pass Input Filter

The BPIF is a two-section active filter designed to extract a single channel from an FM multiplex of subcarrier channels. The FM multiplex is applied through rear panel connector A3J3 to an input amplifer (Q1 through Q4) on the input card A2A3. Input impedance is greater than 100K ohms resistive for all

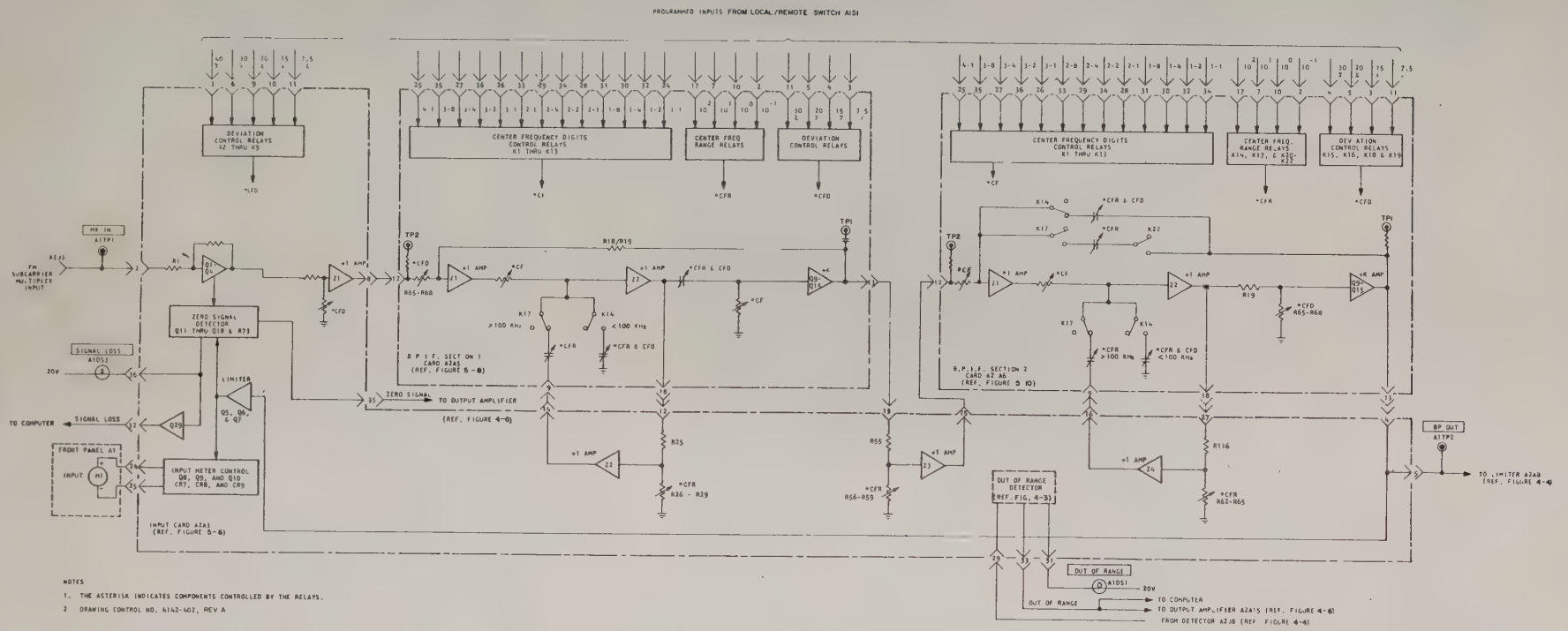

Figure 4-2. Input Control and BPIF Circuit Group Functional Block Diagram

input signals within the frequency range of the discriminator. The FM multiplex output from amplifier Q1-Q4 is coupled through jumpered contacts on relay socket XK1 and an isolation amplifier (Z1) to the first section of the BPIF.

NOTE

Relay K1 is not installed.

The first BPIF section (card A2A5) contains two poles and operates essentially as a band-pass section. The second BPIF section (card A2A6) also contains two poles and operates as a low-pass section. These two sections, connected in series, form a band-pass filter configuration tuned to pass only the assigned frequencies of the selected subcarrier channel. The two BPIF sections are isolated by an amplifier on input card A2A3, thus eliminating any interaction between the two sections. Center frequency and bandwidth adjustments in each section are made by energizing relays in the BPIF which select components necessary to provide the proper BPIF frequency response. These relays are controlled by either the front-panel center frequency and deviation switches or remote-control inputs from an external source. The front-panel CONTROL switch provides the means of switching from local control to remote control.

Also included within the BPIF sections are isolation amplifiers. These are high-input-impedance and low-output-impedance unity-gain amplifiers which isolate portions of the feedback networks, thereby eliminating interaction between response-determining components in the BPIF. The resultant subcarrier channel passed by the BPIF is routed through a second set of normally closed contacts of relay A2A3K1 and pin 5 of input card A2A3 to the FM detection circuit group.

4.3.2.2 INPUT Meter Control and Zero Signal Detector

The subcarrier channel output signal at pin 5 of input card A2A3 is also applied to a two-stage high-gain limiter/amplifier circuit on the input card. This circuit is composed of transistor stages Q5 through Q7 and associated discrete components (see Figure 5-5) and is used to convert the selected subcarrier channel sine wave signal to a substantially constant amplitude square wave. Each of the limiter stages consists of a diode clamping network and an emitter-follower and the two stages are separated by a high gain amplifier. The clamping diodes limit the voltage swing at the input to amplification stages, thus preventing a saturated condition. AC coupling is employed between limiter stages to provide base-line limiting of the subcarrier signal, thus eliminating the effects of amplitude modulation and amplifier bias changes. The limiter circuit output is applied to the INPUT meter control circuit and to the zero signal detector.

The INPUT meter control circuit is employed to drive the front panel INPUT meter (A1M1) which indicates the magnitude of the incoming subcarrier signal. This circuit is composed of transistor stages Q8 through Q10 arranged in an operational amplifier configuration, diode rectifiers CR7 and CR8, and associated discrete components on input card A2A3. (See Figure 5-5.) The subcarrier from the limiter circuit is coupled to the operational amplifier. The amplifier output is coupled through capacitor C22, rectified by diodes CR8 and CR9, and routed to pin A2A3-24 and -25 which are connected to the (+) and (-) terminals respectively of the front panel INPUT meter. Diode CR9 and resistor R52 shunt the meter to provide meter protection from excessively high amplitude inputs. A portion of the amplifier output is coupled through resistors R45 and R46 to complete the feedback loop for the operational amplifier.

The function of the zero signal detector is to sense for a condition in which the amplitude of the incoming subcarrier signal is sufficiently low so as to possibly result in erroneous data at the discriminator output. Components of this circuit consist of transistor stages Q11 through Q18 and associated discrete components located on card A2A3. (See Figure 5-5.) The square-wave subcarrier input signal from the limiter circuit is applied to amplifier Q11. This stage functions as a half-wave rectifier due to the rapid charge time of capacitor C29 during positive half cycles of the input signal and the slow discharge time during negative half cycles. Thus, the output of Q11 is coupled through follower Q12 and capacitor C30 and provides the trigger pulses for transistor switch Q13. With Q13 cutoff, capacitor C31 charges toward +18 volts through resistor R75. When Q13 is turned on, the positive charge on the capacitor is shorted to ground through the transistor. With an acceptable input signal amplitude, the duty cycle of Q13 is such that the transistor is not in the cutoff state long enough for C31 to charge to the point at which Q14 turns on. When the input signal amplitude is below acceptable limits (nominally 10 millivolts), the negative-going transition at the output of Q11 is decreased. Thus, the base of Q13 is reverse biased holding Q13 in the cutoff state, thereby allowing capacitor C31 to charge toward the +18 volt supply voltage. At approximately 4.3 volts, the base of Q14 is forward biased turning Q14 on. As C31 continues to charge, the common emitter voltage for Q14/Q15 increases in the positive direction causing Q15 to shut off. When Q15 is cutoff, the positive transition at the collector is coupled through follower Q17 and drives transistor switches Q17 and Q18 to saturation. The resultant ground level output from Q18 provides a DC return for the front panel SIGNAL LOSS indicator, and transistor Q17 provides the DC return for control relay A2A15K2 in the output amplifier circuit which clamps the discriminator output at an adjustable level from +18 volts to -18 volts.

Potentiometer A2A3R73 is used to adjust the zero signal tolerance. Zener diode CR10 provides circuit protection by limiting the positive excursion at the base of Q14 to +6.2 volts.

4.3.2.3 Out-of-Range Detector

The function of the out-of-range detector circuit is to sense for conditions in which the incoming subcarrier signal is operating at a frequency above or

below the bandedge frequencies of the selected subcarrier channel. The circuit, as shown in Figure 4-3, is composed of positive and negative detectors with a common output switching network. The input to the out-of-range detector circuit is a pulsating DC representative of the selected subcarrier input signal. The RC network composed of resistor R88 and capacitors C35 and C36 filters the input signal to provide an average DC level. This level will vary from approximately +1 volt to −1 volt for lower and upper bandedge signals, respectively. When the input signal is within this range, the + detector is turned off providing a 0-volt input to transistor switch Q27. At the same time, the − detector is turned on and provides a +10 volt input to inverter Q25. This level triggers Q25 thereby providing a 0-volt input to transistor switch Q26. Thus, when the input frequency is within range, both Q26 and Q27 are inhibited providing an open circuit for control relay K2 on card A2A15. Inverter Q28 is turned on by the relay control voltage and provides a logic ZERO (0-volts) out-of-range signal to the remote control device.

If the input signal increases in frequency above bandedge, the average DC input to the + detector increases in the negative direction causing the detector to turn off. The resultant positive-going output of the detector drives transistor switch Q27 into saturation, and thereby provides a DC return for relay A2A15K2 through the transistor. Also, the output level of inverter Q28 is reversed to provide a logic ONE (+5.2 volts) out-of-range signal to the remote control device.

If the input signal frequency falls below the lower bandedge of the selected subcarrier channel, the DC input to the − detector becomes more positive. As a result, the detector is turned on and the negative-going output shuts off inverter Q25. The positive transition at the output of Q25 forward biases transistor switch Q26 which thus provides the DC return for control relay A2A15K2.

4.3.3 FM Detection Circuit Group (Ref. Figure 4-4)

The FM detection circuit group is composed of three functional circuits; a limiter function, a detector, and a single pole filter. All components of this circuit group are located on limiter/detector/single pole card A2A8. The single pole function is the first stage of the three-, five-, or seven-pole low-pass output filter (LPOF) but is described in the following paragraphs because of its immediate relationship with the detector.

4.3.3.1 Limiter Function

The limiter function is a four-stage high-gain limiter/amplifier circuit which converts the single-ended, selected subcarrier channel signal received from the band-pass input filter, into complementary, substantially constant-amplitude square wave outputs. The first three stages of the limiter are differential amplifier configurations and the fourth stage is used as a complementary output transistor switch. The differential amplifiers operate on zero crossings driving one side hard toward saturation and the other side hard toward cutoff for one-half

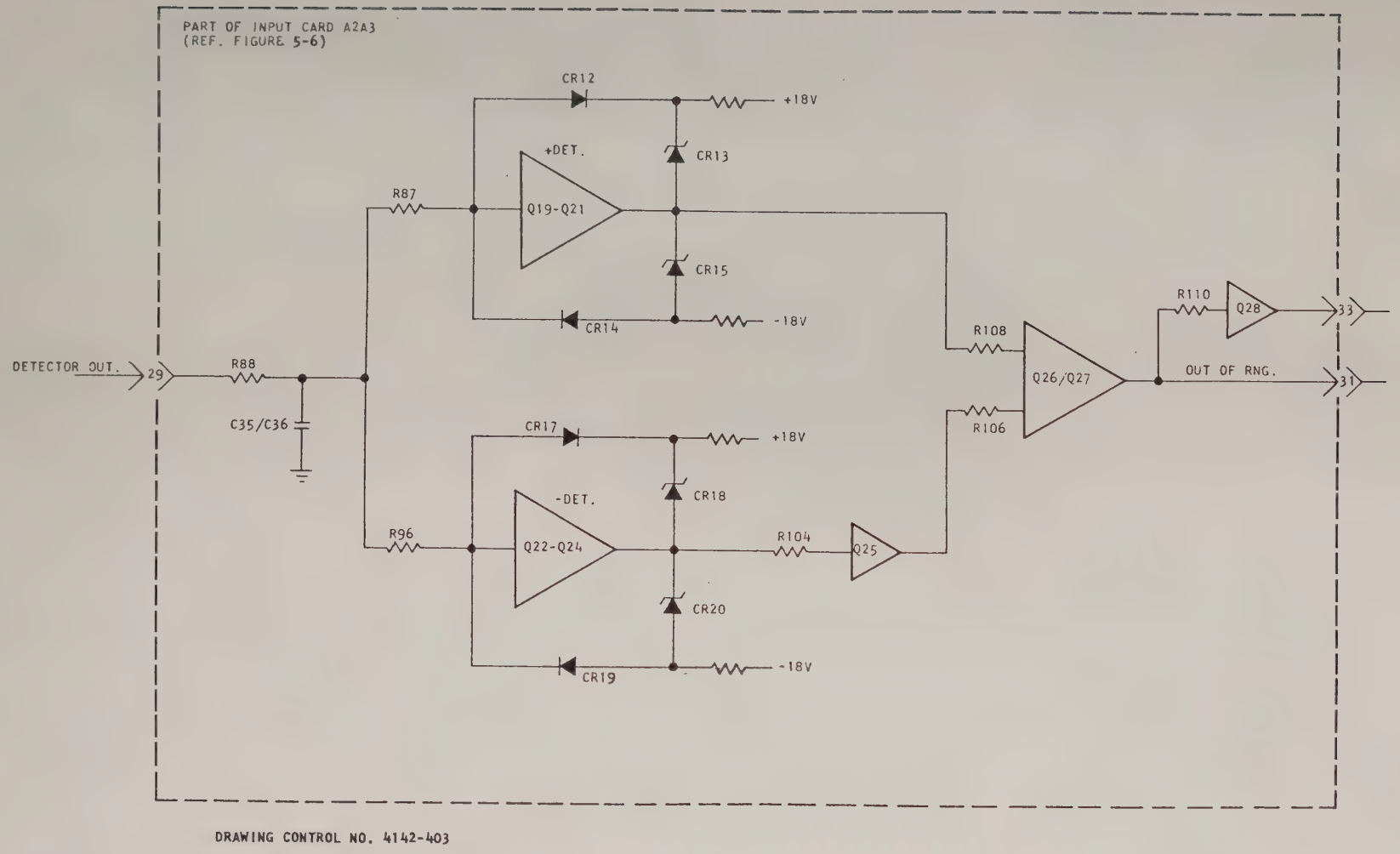

Figure 4-3. Out-of-Range Detector Simplified Schematic Diagram

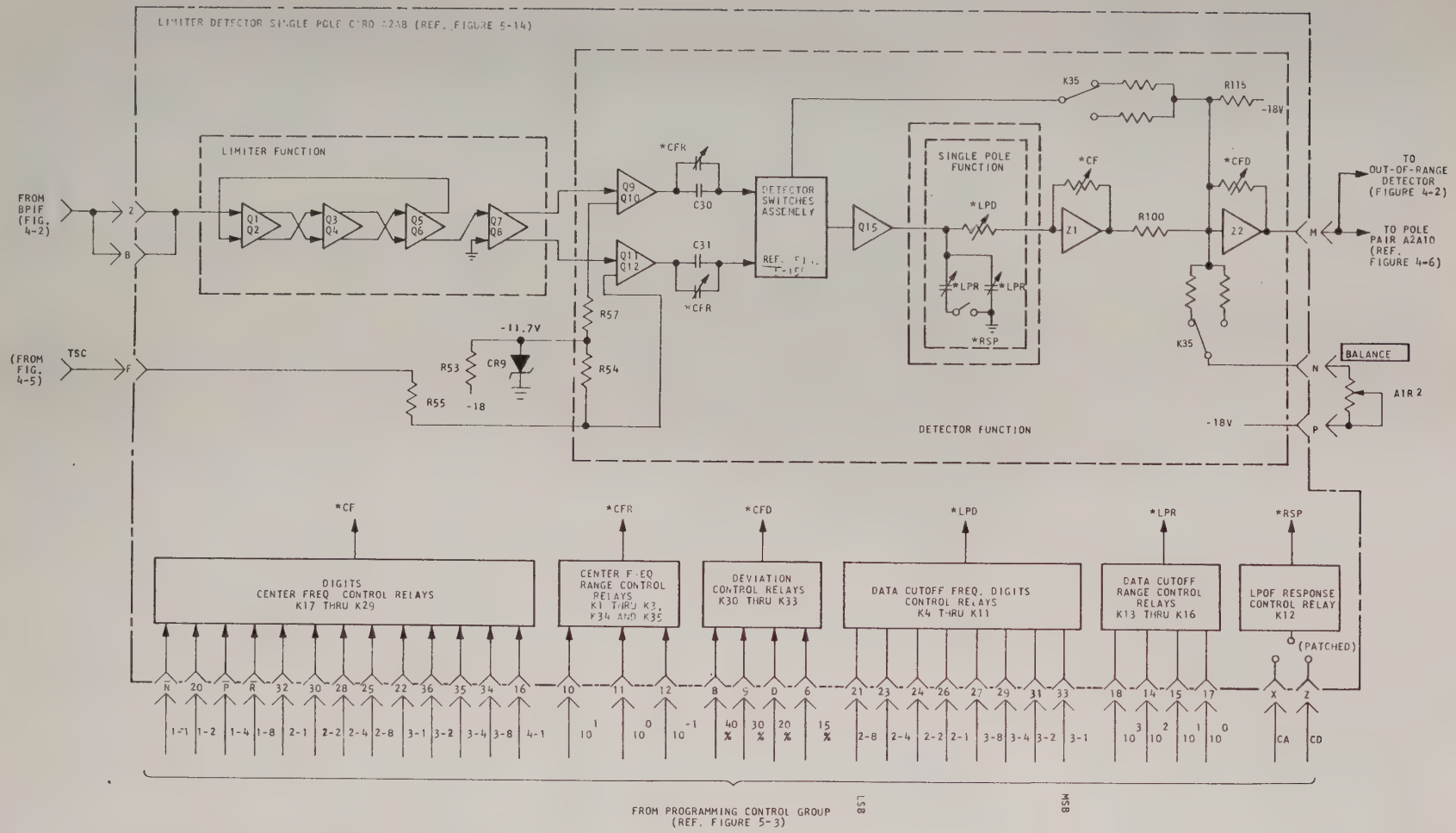

NOTES:

1. THE ASTERISK INDICATES COMPONENTS CONTROLLED BY THE RELAYS.
2. DRAWING CONTROL NO. 4142-404, REV. B

Figure 4-4. FM Detector Circuit Group Functional Block Diagram

cycle of the input sine wave. The direction of drive in each half of the differential amplifier stages is reversed for the second half-cycle of the input. Clamping diodes across the collectors in the first two stages (Q1/Q2 and Q3/Q4) limit the output voltage swing, thereby squaring the input waveform while maintaining zero crossings. The third amplifier stage (Q5/Q6) provides a low-gain and a high-gain output. The low-gain output is a feedback input to the first amplifier stage which compensates for low frequency hysteresis. The high-gain output provides the input drive for the transistor switch Q7/Q8. The complementary outputs of switch Q7/Q8 change state at each zero crossing and provide the triggering inputs for current switches in the detector function. AC coupling is employed between limiter stages to provide base-line limiting of the subcarrier input signal, thus eliminating the effects of amplitude modulation and amplifier bias changes.

4.3.3.2 Detector and Single Pole Functions

The FM detector is essentially an energy detecting circuit which generates a serial stream of current pulses from the subcarrier rate inputs and determines an average amount of energy in the pulse stream. Primary inputs to the detector are the complementary square-wave outputs from the limiter function. Each of the subcarrier rate square-wave signals is applied to a switching device (Q9/Q10 or Q11/Q12) which operate identically but 180° out of phase. Each switch produces square-wave output pulses of fixed amplitudes (+18 volts to +8 volts) with the pulse period being determined by the subcarrier input frequency. The complementary square-wave outputs of the Q9/Q10 and Q11/Q12 are differentiated by RC networks in the outputs. The capacitive component of each RC network is varied for each of four programmable center frequency ranges of the Model 4142 by center frequency range control relays K1 through K3 and K34. The complementary, differentiated pulses are applied to the detector switches assembly. This assembly, Figures 5-14A and 5-14B, is composed of dual, temperature compensated, base rectifier circuits. Each base rectifier passes the positive-going output pulses from the associated RC network and routes these pulses to summing amplifier Q15. The resultant output of this circuit is a stream of current pulses at twice the input frequency. These current pulses provide negative charges on the capacitive component of the single pole function RC network. This charge induces a current flow through the resistive component of the RC network and the feedback loop of operational amplifier Z1.

When the subcarrier input is operating at the programmed center frequency, the generated pulse stream contains a certain average energy level. This energy level causes a current flow through the feedback loop of amplifier Z1, such that the average DC voltage output at Z1 is $\approx$+1.5 volts for all center frequencies. The resultant current flow through R100 (1.5 milliamps) is provided from the -18-volt supply through the front panel BALANCE potentiometer (A1R2) and a test variable resistive load. At center frequency, no current flows through the feedback loop of operational amplifier Z2 and, thus, the center frequency output voltage applied to the low-pass output filter is 0 volt. Increases or decreases in the subcarrier frequency change the rate at which the current pulses are generated. This results in an increase or decrease in the average current level for the pulse stream. The change in average current is the modulation component of the input signal. Thus, an increase of input signal

frequency above the programmed center frequency increases the negative charge on the capacitive component of the single pole function, thereby increasing the average current flow through the resistive component. Since the input to amplifier Z1 is maintained at 0 volts, the increased current flow through the feedback loop causes an increase in the average voltage at the output of Z1. Thus, the current flow through resistor R100 is increased. The current supplied through BALANCE potentiometer A1R2 is fixed at ≈1.5 milliamps. The additional current is supplied through the feedback loop of amplifier Z2 causing a negative-going voltage shift at the output of Z1. The resistive value of the Z2 feedback loop is a function of the programmed center frequency deviation and is selected to provide a −1 volt to +1 volt swing from upper bandedge to lower bandedge for any programmed deviation.

If the subcarrier input signal is below the programmed center frequency, the rate of the current pulses is decreased thereby decreasing the average current flow through the feedback loop of amplifier Z1. As a result, the average voltage output of Z1 decreases which decreases the current flow through R100. Again, since the current flow through the BALANCE potentiometer is fixed at ≈1.5 milliamps, the excess current is coupled through the feedback loop of amplifier which results in a positive-going voltage shift at the output of Z2.

An additional input to the detector function is the tape-speed compensation input. The generation of this signal and its affect on detector operation are described in the following paragraphs.

4.3.4 Tape-Speed Compensation (Ref. Figure 4-5)

The -02, -04, and -06 configurations of the Model 4142 discriminator are provided with a tape-speed compensation (TSC) control circuit. The function of the TSC circuit is to compensate for selected subcarrier frequency errors resulting from tape-speed variation. A proportional reference discriminator, such as another Model 4142, detects the tape-speed change and produces a voltage proportional to the percent of change. This voltage is applied to rear panel connector A3A2 and routed to the input (pin 12) of TSC card A2A7. The TSC circuit is essentially an RC delay network with intermediate stages of amplification. The discrete resistive and capacitive values used in the delay network are automatically selected by the programmed center frequency and deviation parameters to match the inherent delays of the band-pass input filter. The TSC input normally accepts a positive sense with a sensitivity of 4 volts peak for 3.0% deviation. If negative sense is required, this may be obtained by switching the output jumper on card A2A7 from terminal E1-E2 to terminals E1-E3. This places inverter stage Z4 in series with the output, thereby providing a negative-going output for a positive-going input.

Assuming the reference discriminator is programmed for positive sense (TSC input voltage directly proportional to tape-speed error), an increasing frequency tape-speed error provides a positive-going TSC input voltage to card A2A7. With the TSC card jumpered for positive sense (E1 to E2), the output voltage at pin 13 is positive. This signal is applied through resistor R55 on the FM

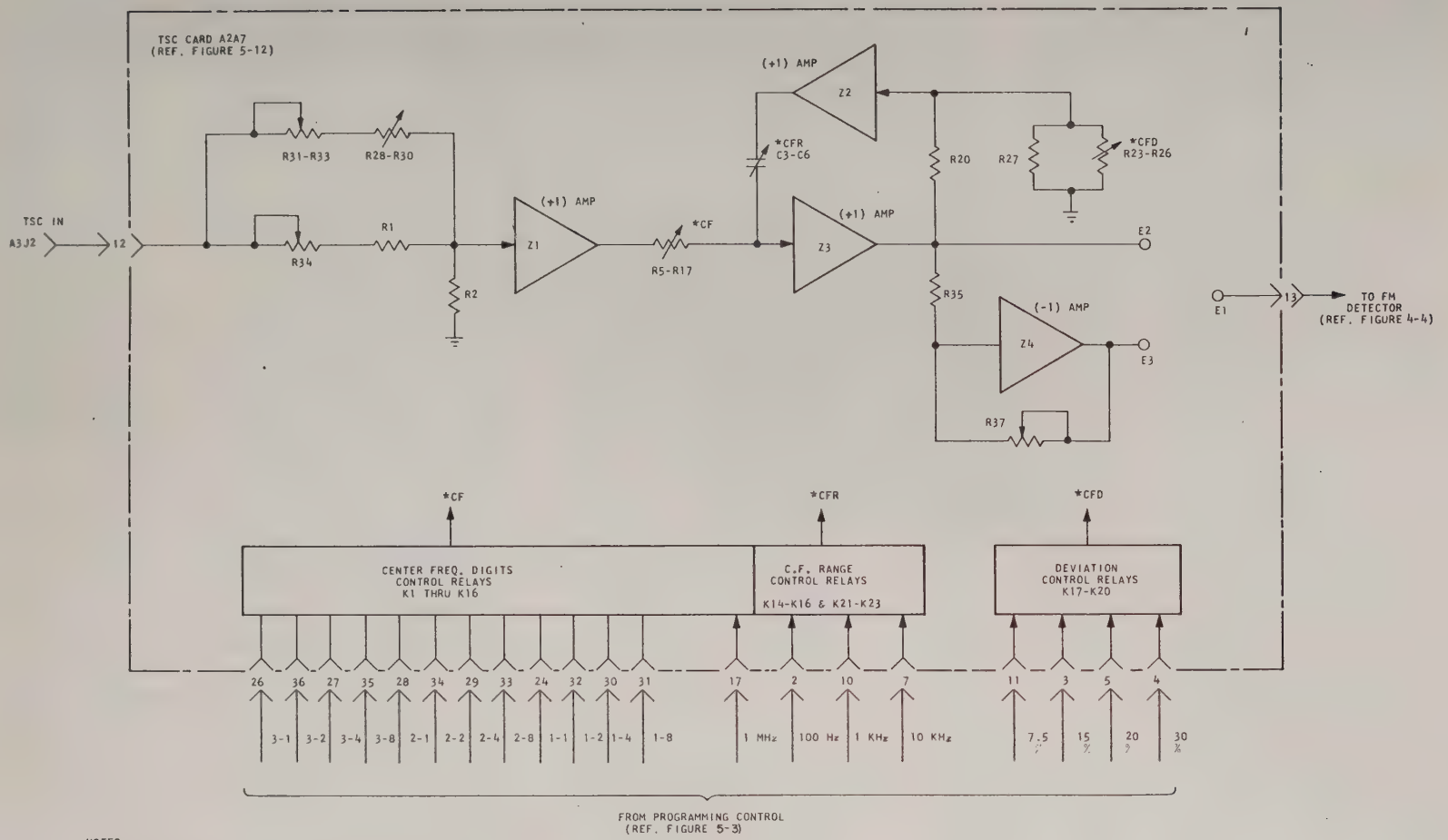

NOTES:

1. THE ASTERISK INDICATES COMPONENTS CONTROLLED BY THE RELAYS.
2. DRAWING CONTROL NO. 4142-405.

Figure 4-5. Tape-Speed Compensation Circuit Group Simplified Logic Diagram

detector card to the Q11/Q12 transistor switching circuit. (See Figure 4-4.) The tape-speed error, as a component of the multiplex input, increases the rate of the square-wave inputs to the detector which increases the average current in the detector, thereby decreasing the output voltage. However, the TSC input voltage, representative of magnitude of the error, produces a current flow through resistor R55. Since the emitter voltage of transistor Q12 fixes the current flow through resistor R54, the current flow through R55 is offset by decreasing the current through Q12 which in turn limits the amplitude of the square-wave pulses at the collector. Thus, the overall average current flow in the detector decreases which results in an increasing voltage at the output.

4.3.5 Low-Pass Output Filter and Output Amplifier Circuit Group (Ref. Figure 4-6)

This circuit group is composed of either a three-, five-, or seven-pole low-pass output filter (LPOF) and the output amplifier. Individual descriptions of these circuits are provided in the following paragraphs.

4.3.5.1 Low-Pass Output Filter

The function of the LPOF is to suppress undesired high-frequency subcarrier components in the signal received from the FM detector, thereby providing a noise-free output signal representative of the data contained in the selected subcarrier channel. Filter cutoff frequencies between 4 Hz and 300 kHz are selectable to three significant digits. Also, either constant amplitude (CA) or constant delay (CD) filter response characteristics may be selected. Selection of the operating parameters for the low-pass filter are programmed from either the front panel of the Model 4142 or from an external source. The front panel LOCAL/REMOTE switch selects the desired mode of operation.

The LPOF is composed of either three, five, or seven relay-tunable, RC filter stages, depending upon the design configuration. Each filter stage is followed by an isolation amplifier. For all configurations of the Model 4142, the first filter stage is located on card A2A8 and is functionally part of the FM detector as described in paragraph 4.3.3. For three-pole LPOF configurations (Models 4142-01 and -02), the second and third filter stages are located on pole-pair card A2A12. For five-pole configurations (Models 4142-03 and -04), filter stages two through five are located on pole-pair cards A2A11 and A2A12. For seven-pole LPOF configurations (Models 4142-05 and -06), all three pole-pair cards are used. Since the operation of each pole-pair card is the same, only the operation of the filter stage located on card A2A10 (Figure 4-6) is discussed below.

Data cutoff control relays K1 through K9, data cutoff range relays K10 through K14, and response relay K15 are controlled by the programmed input signals received from the programming control circuit group. A logic ZERO (ground level) input on any line allows the associated relay to energize. Thus, a discrete RC filter network is established for each set of data cutoff frequency/response

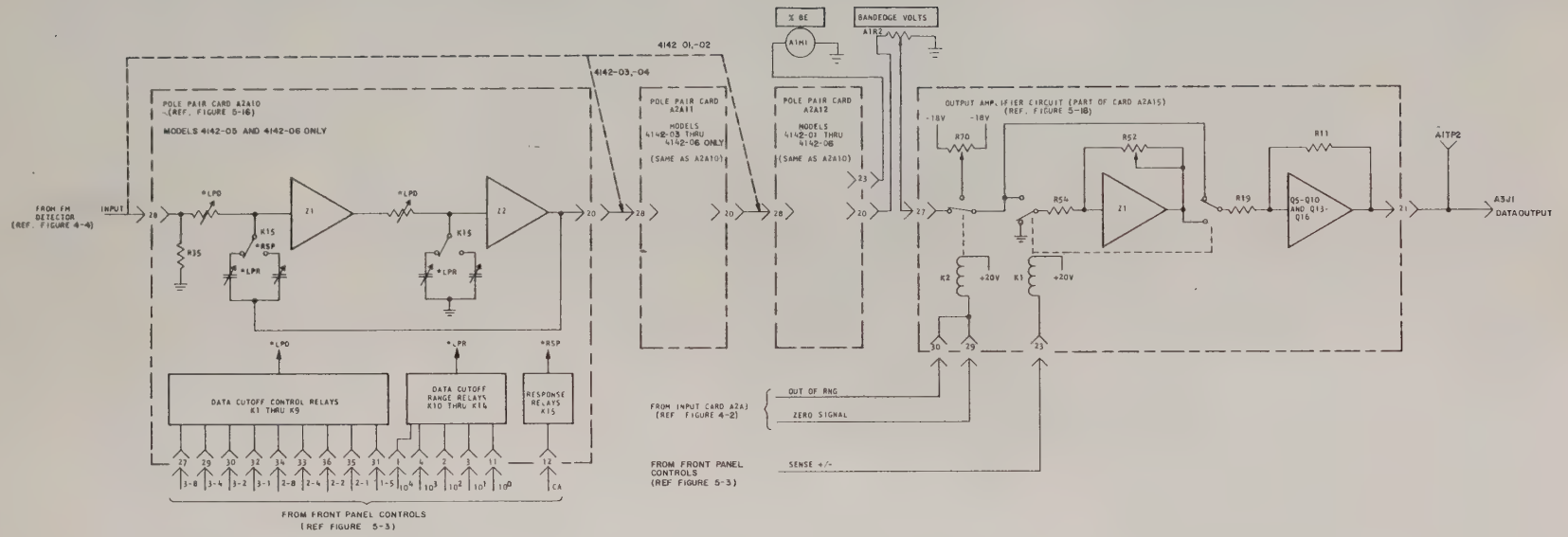

NOTES:

1. THE ASTERISK INDICATES COMPONENTS CONTROLLED BY THE RELAYS.
2. DRAWING CONTROL NO. 4142-406, REV A

Figure 4-6. Low-Pass Output Filter and Output Amplifier Circuit Group Functional Block Diagram

characteristic parameters that is programmed. The RC component values are selected to exhibit the proper frequency attenuation for the programmed cutoff frequency so as to route only the low-frequency intelligence in the subcarrier input to the output amplifier circuit.

In order to prevent interaction between filter poles in the LPOF, isolation amplifiers are used between each RC network. An in-phase feedback loop is provided between the output of the second isolation amplifier and the input of first isolation amplifier on each pole-pair card. The purpose of the active feedback loop is to shape the frequency response in a manner that is not possible with only passive components. Each feedback loop, in effect, varies capacity as a function of frequency in order to maintain the actual output response curve at an amplitude level as close as possible to the optimum curve.

4.3.5.2 Output Amplifier Circuit

The output amplifier circuit is composed of the front panel BANDEDGE VOLTS control (A1R1) and polarity sense relay K1, zero signal relay K2, operational amplifier Z1, and the output amplifier consisting of transistor stages Q5 through Q10 and Q13 through Q16 located on regulator/output amplifier card A2A15. The filtered data output is routed from pin 20 of the last pole-pair card in the LPOF to BANDEDGE VOLTS potentiometer (A1R1). Potentiometer A1R1 controls the amplitude of the data signal input applied to the output amplifier thus controlling the resultant output amplitude. The BANDEDGE VOLTS control is adjusted to provide specific output levels, within the range of +10 volts to -10 volts, for peak upper and lower bandedge deviation, respectively.

The adjusted data signal is applied to card A2A15 at pin 27 and routed through contacts of zero signal relay K2. If the amplitude of the selected subcarrier input signal is below a preset level or if the frequency of the input signal is outside the programmed deviation limits, a ground input is applied to relay K2 from input card A2A3 causing the relay to energize. (Refer to paragraph 4.3.2.) When relay K2 is energized, the input to the output amplifier is clamped to a value preset at potentiometer R70. Potentiometer R70 is normally adjusted to provide a data output level of +11 volts or -11 volts, depending on the deviation sense mode of operation, thus providing an off-scale indication to recording devices monitoring the discriminator output. This value may set at any value between +11 volts and -11 volts as required by the user.

Polarity sense relay K1 is controlled by front panel SENSE switch A1S14. When switch A1S14 is in the (-) position, relay K1 is de-energized and operational amplifier Z1 is bypassed. Thus, the filtered data output from the LPOF is coupled directly to the output amplifier and the output voltage (pin 21) becomes more negative as the frequency of the input signal increases. When switch A1S14 is in the (+) position, relay K1 is energized providing a polarity inversion through amplifier Z1. Thus, the output voltage becomes more positive as the input signal frequency increases.

The output amplifier is composed of a differential input amplification stage (Q5, Q6, Q7, and Q13), dual complementary emitter-follower output stages (Q8/Q10 and Q14/Q15), and current limiter stages (Q9 and Q16). (See Figure 5-18.) The gain of the amplification stage is approximately 1.5. The dual complementary emitter-follower stage provides for a low impedance, high-current output. The limiter stages limit the output current to 100 milliamperes minimum and 140 milliamperes maximum.

4.3.6 DC Power Circuits (Ref. Figures 5-18, 5-22, and 5-23)

The power supply assembly (A4) and the voltage regulator circuits on regulator and output amplifier card A2A15 provide all DC voltages required for the operation of the Model 4142 PBW Tunable Discriminator. As shown in Figures 5-22 and 5-23, the primary AC power is routed from rear panel connector A3J6 to the front panel POWER switch A1S13. Switch A1S13 controls application of AC power to rear panel blower A3B1 and to the primary of the primary winding of power transformer A4T1. The power supply assemblies for Model 4142-0X-0 configurations (Figure 5-22) and the Model 4142-0X-8 configurations (Figure 5-23) are the same except the -0 configurations are provided with a 115V AC input and the -8 configurations are provided with a 230V AC input. Thus, different power transformers are required for the -1 and -8 configurations and the connections for blower motor A3B1 vary slightly.

Three secondary windings of transformer A4T1 are connected to full-wave diode bridge rectifiers A4CR1, A4CR2, and A4CR3. These rectifiers provide the unregulated DC voltage inputs to five voltage regulator circuits on card A2A15 (see Figure 5-18). Since the operation of each regulator circuit on card A2A5 (+18 volts, −18 volts, +5.2 volts, and +20 volts) is similar, only the operation of the +18 volt regulator is discussed in detail.

The +18 volt regulator circuit is composed primarily of a series regulator, a regulator driver A2A15Q1, a differential comparison amplifier A2A15Q3, and a temperature-compensating, constant-current source A2A15Q2. The unregulated +18 volt output of diode bridge rectifier A4CR1 is routed through fuse A4F1 and series regulator A4Q1 to pin A2A15-14 for distribution to the discriminator circuits. Regulator driver A2A15Q1 provides the base drive current for the series regulator. Regulation is accomplished by comparing a sample of the output voltage, sensed by potentiometer R16, with a reference voltage established by diodes CR2 and CR3. The differential comparison amplifier senses the magnitude and direction of any output voltage changes and produces an output that is proportionally equal and opposite to the error detected. The error signal output controls the biasing of regulator driver Q1 which in turn controls the conduction of series regulator A4Q1, thus compensating for the output voltage change. Stage A of transistor Q2 provides the current source for the high-gain output of stage A in the differential amplifier. Stage B of transistor Q2 is connected as a diode which provides temperature compensation for the +18 volt regulator.

The functional operation of the −18 volt, +20 volt, and +5.2 volt regulators on card A2A15 are similar to that provided for the +18 volt regulator except the +20 volt and +5.2 volt regulators are not adjustable.

SECTION 5

MAINTENANCE

5.1 GENERAL

This section contains information to aid in troubleshooting and maintaining the Model 4142 PBW Tunable Discriminator. This information is intended to be used with the circuit descriptions contained in Section 4 to maintain the Model 4142 at the optimum operational status. Maintenance information included in this section includes a troubleshooting guide (paragraph 5.2); checkout and adjustment procedures (paragraph 5.3); and assembly, schematic, and wiring diagrams (Figures 5-1 through 5-23).

5.2 TROUBLESHOOTING GUIDE

In the event an abnormal condition is detected, or suspected, in the operation of the Model 4142, the following general method of isolating and repairing the trouble is recommended:

a. Perform a visual inspection (paragraph 5.2.1).

b. Perform the checkout and adjustment procedures (paragraph 5.3) to localize a malfunction to a functional circuit.

c. Use standard maintenance techniques based on a knowledge of normal circuit operation (Section 4) and the assembly, schematic, and wiring diagrams (Figures 5-1 through 5-23) in order to isolate the failure to a replaceable part.

d. When the defective component is located, refer to Section 6, Parts Lists, for description and part number of replacement component.

e. After replacing components, repeat applicable checkout and adjustment procedures to ascertain that the original failure has been removed and that a new failure has not been introduced.

The Model 4142 should be subjected to a regular inspection program similar to that recommended for other types of electronic equipment. The following visual inspection should be performed periodically as a means of preventive maintenance, or if a malfunction occurs, to aid in isolating the trouble.

a. Inspect wiring for loose or broken connections.

b. Inspect front panel and rear panel connectors, switches, and controls for signs of damage.

c. Inspect printed-wiring cards for mechanical damage or component discoloration.

d. Inspect card tray, card guides, and card mating connectors for signs of damage.

5.3 CHECKOUT AND ADJUSTMENT

The procedures contained in this paragraph are designed to provide a means for evaluating the operational status of the various functional circuits contained in the Model 4142 PBW Tunable Discriminator. Where applicable, instructions are provided in the checkout procedures for restoring a malfunctioning circuit to within acceptable operational limits by adjustment. References are provided in the procedural instructions to applicable circuit descriptions contained in Section 4 in the event troubleshooting a malfunctioning functional circuit is required.

Several circuits contain components which are aged at the factory to provide optimum performance. These components are identified either by an asterisk and note on the schematic diagram or in a NOTE on the page preceding the schematic. When replacing any of these components, order the component from EMR. Specify "aged" component and the assembly number of the card for which it is required. See Section 6 for the correct parts list for each assembly.

The appropriate checkout and adjustment procedures should also be performed following replacement of components to verify that the failure has been corrected.

5.3.1 Test Equipment Required

The following test equipment or equivalent is recommended for the checkout and adjustment procedures outlined in this section.

a. DC Voltmeter: John Fluke 825A or equivalent.

b. Signal Generator: Waveforms 401 or equivalent.

c. RMS Meter: Hewlett-Packard 400L or equivalent.

d. Frequency Counter: Hewlett-Packard 5245L or equivalent.

e. Oscilloscope: Tektronix 545A or equivalent.

5.3.2 Voltage Regulators

To check the operation of the power supply assembly (A4) and the voltage regulator circuits on card A2A15, proceed as follows:

NOTE

If one or more of the following voltage levels are excessively out of tolerance, troubleshoot the power supply circuits (ref. paragraph 4.3.6) before attempting adjustment.

a. Connect a Fluke 825A DC voltmeter between TP2 (+) and TP5 (ground) on card A2A15. The voltmeter should indicate +18 volts ±50 millivolts. Adjust potentiometer A2A15R16, if necessary, to obtain proper indication.

b. Connect the DC voltmeter between TP1 (−) and TP5 (ground) on card A2A15. The voltmeter should indicate −18 volts ±50 millivolts. Adjust potentiometer A2A15R18, if necessary, to obtain proper indication.

c. Connect the DC voltmeter between TP7 (+) and TP5 (ground) on card A2A15. The voltmeter should indicate approximately +5 volts. The +5-volt regulator is not adjustable. If indication is abnormal, troubleshoot the power supply and regulator circuit. (Ref. Figure 5-18.)

d. Connect the DC voltmeter between TP8 (+) and TP5 (ground) on card A2A15. The voltmeter should indicate approximately +20 volts. This level is not adjustable.

5.3.3 Input Control and Band-Pass Circuits Checkout Procedures

The following paragraphs are designed for checkout and adjustment of the input control and band-pass circuit group. If normal output indications cannot be obtained, refer to paragraph 4.3.2 for circuit descriptions.

5.3.3.1 Band-Pass Input Filter Checkout Procedure

a. Using an external signal generator and an rms meter, apply an unmodulated subcarrier signal of 1 volt rms at the rear panel INPUT connector A3J3.

b. Using the front panel controls, program the Model 4142 to accept the selected subcarrier signal input.

c. Using an rms meter, observe the BPIF output (front panel BP OUT test jack) for a 1-volt rms indication (nominal value).

d. On the front panel, set DEVIATION (±%) switch A1S2 to 7.5.

e. On the external signal generator, deviate the frequency ±7.5% from bandcenter.

f. Observe the rms meter for a nominal value of −3 db ±1 db at the BPIF output (front panel BP OUT test jack).

g. Repeat steps (d) and (e) for deviations of ±15%, ±20%, ±30%, and ±40%. For all positions, the BPIF should have unity gain (nominally) from input to output at center frequency. Bandedge indications for the ±15% and ±20% positions are −3 db ±1 db. Bandedge indications for the ±30% and ±40% positions are −3 db ±2 db.

5.3.3.2 Zero Signal Detector Checkout and Adjustment Procedure

a. Using an external signal generator and an rms meter, apply an unmodulated subcarrier signal of the desired minimum input amplitude level (10 millivolts to 50 millivolts) at the rear panel INPUT connector A3J3.

b. Set the discriminator front panel controls to accept the selected subcarrier signal input.

c. Rotate potentiometer A2A3R73 until the front panel SIGNAL LOSS lamp illuminates. Reverse the rotation of R73 until the SIGNAL LOSS lamp extinguishes. This adjustment sets the signal loss level.

5.3.3.3 INPUT Meter Circuit Checkout Procedure

a. Using an external signal generator and an rms meter, apply an unmodulated subcarrier signal of 50 millivolts rms at the rear panel INPUT connector A3J3.

b. Set discriminator front panel controls to accept the selected subcarrier signal input.

c. Observe the discriminator front panel INPUT meter for a 50-millivolt indication.

d. Increase the amplitude of the subcarrier signal input to 5 volts rms and observe the INPUT meter for a 5-volt indication.

5.3.3.4 Out-of-Range Detector Checkout Procedure

a. Using an external signal generator and an rms meter, apply an unmodulated subcarrier signal of 1 volt rms to the rear panel INPUT connector A3J3.

b. Set the discriminator front panel controls to accept the selected subcarrier signal input.

c. Using a DC voltmeter, measure the voltages at A2A3TP2 and TP3. These are as follows:

TP2 -- +5 volts (approximate)
TP3 -- -5 volts (approximate)

d. Deviate the subcarrier signal input beyond the upper bandedge of the selected subcarrier channel and observe that the front panel OUT-OF-RANGE indicator illuminates.

e. Measure the voltage at TP3; this should be approximately +5 volts.

f. Deviate the subcarrier signal below the lower bandedge of the selected subcarrier channel and observe that the front panel OUT-OF-RANGE indicator illuminates.

g. Measure the voltage at TP2; this should be approximately -5 volts.

5.3.4 FM Detector Circuit Group Checkout Procedures

The following procedures are designed to check the operation of the FM detector circuit group. If normal indications cannot be obtained, refer to the appropriate circuit description provided in paragraph 4.3.3.

NOTE

Perform the following procedures with FM detector card A2A8 installed on an extender card (EMR-T Part No. 14199).

5.3.4.1 Limiter Circuit Checkout and Adjustment Procedure

a. Using an external signal generator and an rms meter, apply an unmodulated 10 kHz subcarrier signal of 10 millivolts rms to the rear panel INPUT connector A3J3.

b. Set the discriminator front panel controls to accept the 10 kHz subcarrier signal input.

c. Using an oscilloscope, observe the waveforms at the junctions of C19/R43 and C20/R45 on card A2A8. (Reference Figures 5-13 and 5-14.) The output waveforms should be symmetrical 10 kHz square waves, 180° out of phase.

d. Increase the subcarrier input amplitude to 100 millivolts and observe that the waveforms of step (c) do not change. If necessary, adjust potentiometer A2A8R6, while switching between 10 millivolt and 100 millivolt input levels, to adjust square wave symmetry.

e. Increase the input signal amplitude to 5 volt rms and observe that the waveforms of step (c) do not change.

5.3.4.2 Detector Circuit Checkout Procedure

a. Using an external signal generator, apply a 100 kHz subcarrier input signal to rear panel INPUT connector A3J3.

b. Program the Model 4142 front panel controls as follows:

SWITCHES	POSITION
CONTROL	LOCAL
CENTER FREQUENCY	0100. kHz
DEVIATION	20
SENSE	+
DATA CUTOFF	010. Hz
LPOF	CA

c. Connect a DC voltmeter to test jack TP1 of the first pole-pair card in the applicable discriminator configuration. (Card A2A12 for Models 4142-01 and -02, card A2A11 for Models 4142-03 and -04, and card A2A10 for Models 4142-05 and -06.) Rotate the front-panel BALANCE control to obtain a 0-volt indication.

d. Adjust the signal generator to provide a 120 kHz subcarrier input. The DC voltmeter should indicate approximately −1 volt (−1.0 to −1.1 volt acceptable).

5.3.5 Low-Pass Output Filter and Output Amplifier Circuit Group Checkout Procedures

The following paragraphs describe the checkout and adjustment procedures for the individual circuits of the LPOF and output amplifier circuit group. If proper

output indications cannot be obtained, refer to the appropriate circuit description provided in paragraph 4.3.5.

5.3.5.1 LPOF Checkout and Adjustment Procedure

a. Remove the FM detector card A2A8.

b. Rotate front panel BANDEDGE VOLTS control fully clockwise.

c. Using an external voltage source, apply a +1-volt ±10-millivolt input level to test jack TP1 on the first pole-pair card in the discriminator. (Card A2A12 for Models 4142-01 and -02, card A2A11 for Models 4142-03 and -04, and card A2A10 for Models 4142-05 and -06.)

d. Using a DC voltmeter, measure the input level to the output amplifier at test jack A2A15TP6. The voltage level should be +1 volt ±20 millivolts. If normal indication cannot be obtained, adjust the LPOF circuit as follows:

1. Apply a ground to test jack TP1 on the first pole-pair card of the discriminator.

2. Connect a DC voltmeter to test jack TP2 on the card.

3. Adjust potentiometer R14 for a 0-volt ±10-millivolt reading on the voltmeter.

4. Connect the voltmeter to test jack TP3 and ground test jack TP2.

5. Adjust potentiometer R29 for a 0-volt ±10-millivolt reading on the voltmeter.

6. Repeat steps (2) through (5) for the second and third pole-pair cards, if applicable, leaving the ground of step (1) connected to the first pole-pair card.

CAUTION

Remove the ground before replacing the FM detector card.

7. Replace the FM detector card.

5.3.5.2 Output Amplifier Checkout and Adjustment Procedure

a. Using an external signal generator, apply a 100 kHz subcarrier input signal to rear panel INPUT connector A3J3.

b. Set the Model 4142 front panel controls as follows:

CONTROLS	POSITION
CONTROL	LOCAL
CENTER FREQUENCY	0100. kHz
DEVIATION (±%)	20
SENSE	+
DATA CUTOFF	10.0 Hz
LPOF	CA
BANDEDGE VOLTS	Fully Clockwise

c. Connect a DC voltmeter to DATA OUT test jack A1TP2. Rotate the front-panel BALANCE control to obtain a 0-volt (±200-millivolt) indication.

d. Adjust the signal generator for an input signal frequency of 120 kHz. The DC voltmeter should indicate +10 volts minimum.

e. Set the front panel SENSE switch to (−). The voltmeter should indicate −10 volts minimum.

If normal output indications cannot be obtained, calibrate the output amplifier circuit as follows:

a. Remove pole-pair card A2A12.

b. Apply a ground level to test jack TP6 on card A2A15.

c. Connect a DC voltmeter to test jack TP4 on card A2A15.

d. Set the front panel SENSE switch to (−).

e. Adjust potentiometer A2A15R65 for a 0-volt ±10 millivolt indication on the voltmeter.

f. Set the front panel SENSE switch to (+).

g. Connect the voltmeter to test jack A2A15TP3 and adjust potentiometer A2A15R71 for a 0 volt ±20 millivolt indication on the voltmeter.

h. Alternately set the SENSE switch for positive (+) and negative (−) sense and adjust potentiometer A2A15R71 to the point at which deviation of meter indication is minimum.

i. Remove the ground input from test point A2A15TP6 and apply a calibrated +1 volt level to the test point.

j. Alternately set the SENSE switch for positive (+) and negative (−) sense and adjust potentiometer A2A15R52 to the point at which the positive and negative output indications are of equal magnitude.

k. Replace the pole-pair card removed in step (a).

5.3.6 Tape-Speed Compensation (TSC) Circuit Checkout and Adjustment Procedure

The following procedure is designed to check the operation of the TSC circuit contained in Models 4142-02, -04, and -06 discriminators. If the proper indications cannot be obtained, refer to the TSC circuit description provided in paragraph 4.3.4.

a. Using an external signal generator, apply an unmodulated 10 kHz subcarrier signal to rear panel INPUT connector A3J3. Signal amplitude may be any value from 10 millivolts to 5 volts rms.

b. Program the Model 4142 front panel controls to accept the 10 kHz center frequency subcarrier input and ±30% deviation.

c. Set front panel SENSE switch to +.

d. Using a DC voltmeter, monitor the voltage level at front panel test jack A1TP2 (DATA OUT). Rotate the front panel BALANCE control to obtain a 0-volt indication.

e. Using an external voltage source, apply a +4 volt level to the rear panel TSC connector A3J2.

f. If the discriminator TSC is set for positive sensing (E1 to E2 jumper on TSC card; see Figures 5-11 and 5-12), the DC voltmeter should indicate −1 volt. Positive sensing TSC is normally supplied; however, negative sensing can be provided by changing the TSC card jumper to connect E1 and E3. For negative sensing TSC, the data output will be +1 volt in this test.

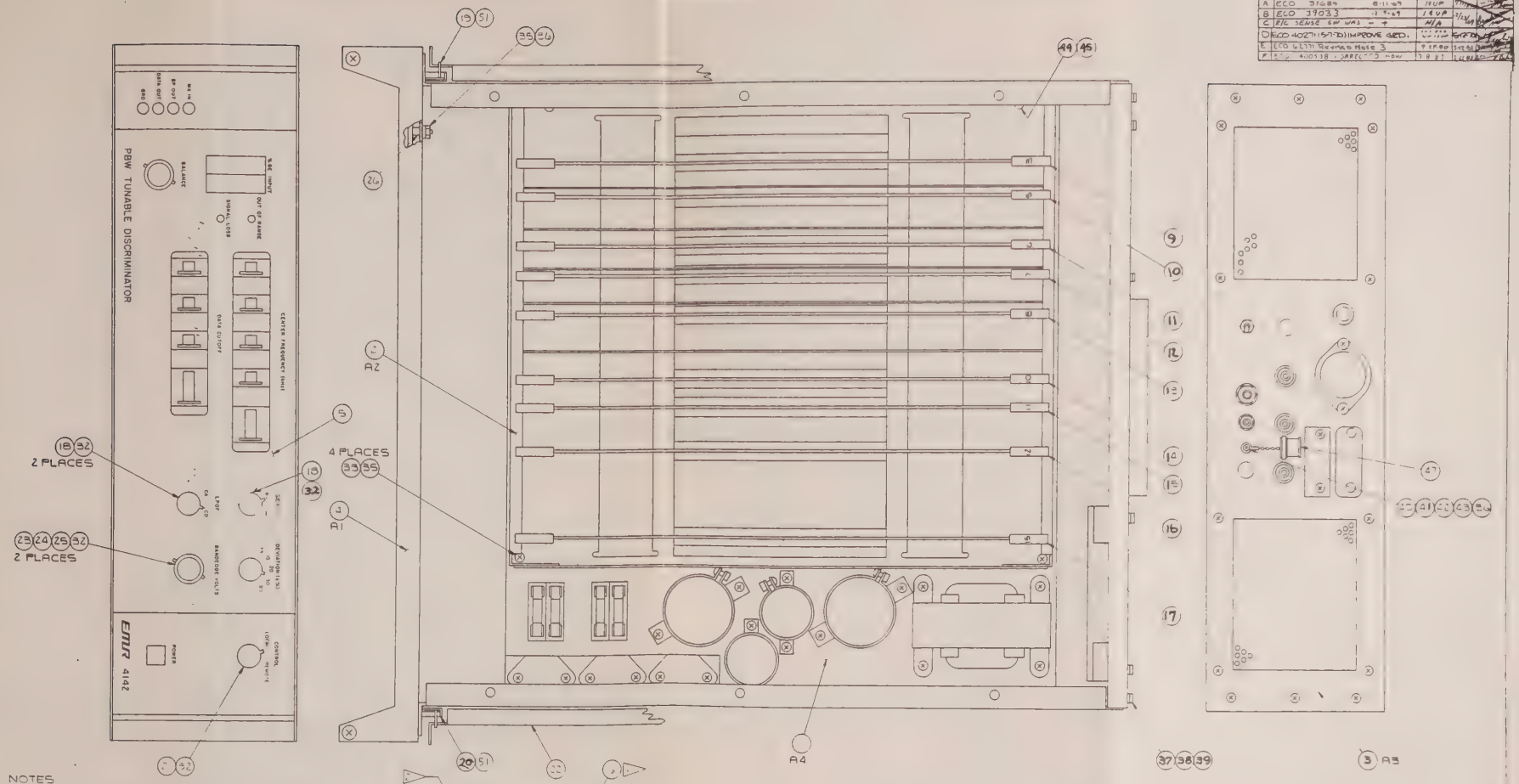

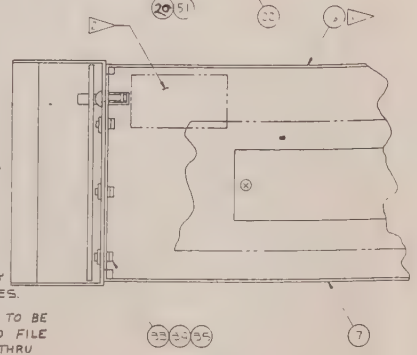

NOTES

1. ITEM 6, TOP COVER ASSY IS NOT SHOWN IN TOP VIEW
2. APPLY APPLICABLE TITLE, MODEL, SERIAL & ASSY NOS. 090 HIGH, COLOR BLACK 27038 OF FED-STD-595, INK TO CONFORM TO FED SPEC TT-I 558.
3. FOR ITEMS UNDER TOLERANCE SHIPPED WITH UNIT SEE SHIPPING KIT 147 89-00706 FOR -3 CONFIG, 147 89-00707 FOR BSE, -1, -2, -4, -5 CONFIG.
4. ITEMS 27, 28, 48, 49, 50, ARE NOT SHOWN IN F/D
5. ITEM 28, GROMMET, IS USED TO PREVENT WIRES FROM CHAFING ON SHARP EDGES OF SHEET METAL. IT MAY BE NECESSARY TO TRIM THE GROMMET IF SPACE DICTATES.
6. C1, L1, L2 & R1 ARE NOT SHOWN IN F/D BUT ARE TO BE WIRED ON CARD FILE AS SHOWN ON CARD FILE WIRING DIAGRAM CALLED FOR ON PL-17676 THRU PL-17676-5. SLEEVE LEADS OF COMPONENTS A/R.

Figure 5-1. Model 4142 PBW Tunable Discriminator Major Assembly Locations

REVISIONS			
A	ECO 37684	8-11-69	14UP
B	ECO 39033	12-9-69	14UP
C	R/C SENSE SW WAS - +		N/A
D	ECO 40271 (57-70) IMPROVE GRD.		
E	ECO 62771 Revised Note 3		
F	ECO 400538 CORRECTED NOW		

089 89 00061	FOR PARTS LIST SEE PL 17676	-5
00060		-4
00059		-3
00058		-2
00057		-1
089 89 00056	FOR PARTS LIST SEE PL 17676	

FINAL

DISCR, ASSY, TUNABLE PBW

06141	E	17676	F
089 89 00056			

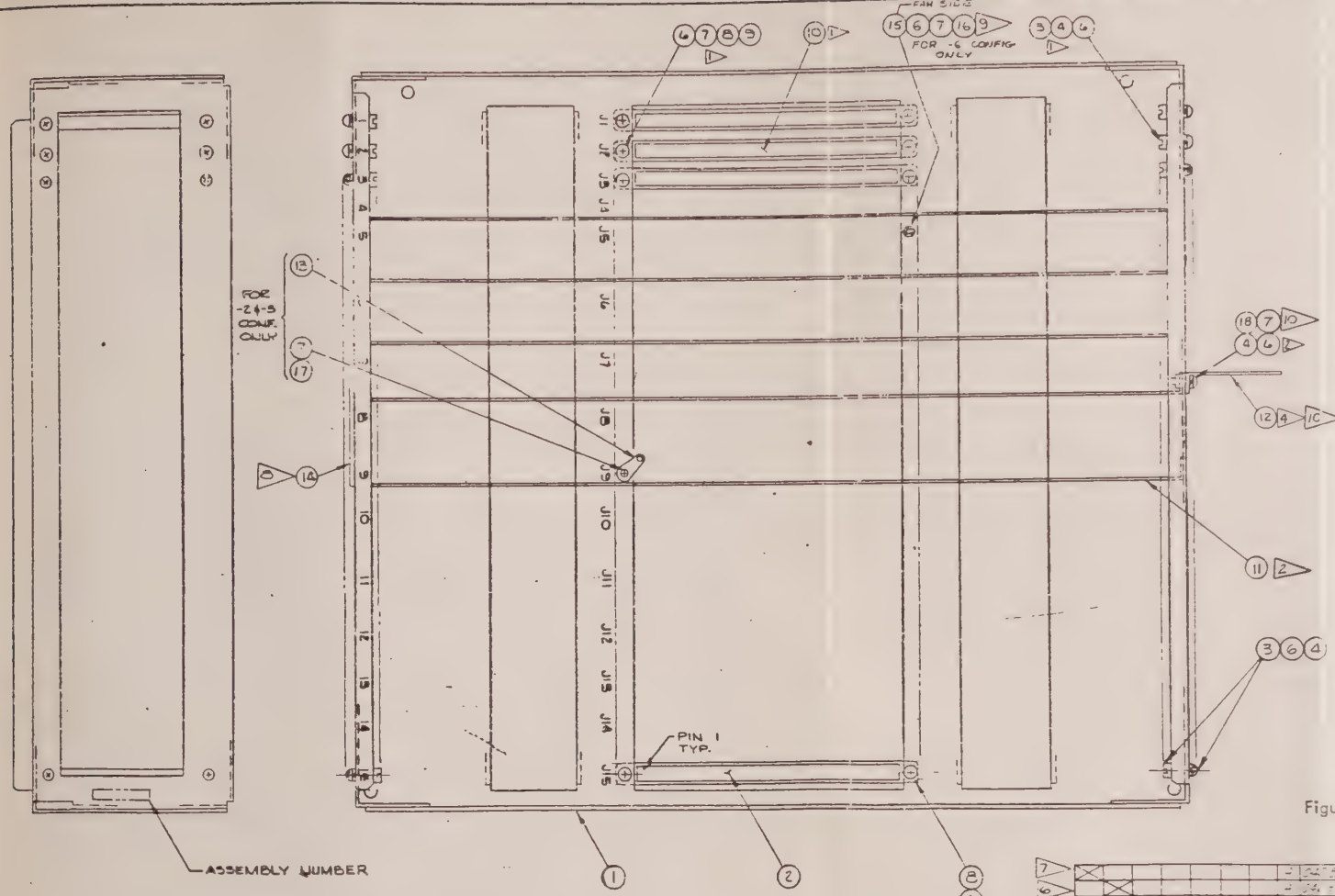

REVISIONS				
DTR	DESCRIPTION	INITIAL EFFECTIVE	DATE	APPROVED
A	ECO 33505 4-18-68	1 UP	4-26-68	
B	ECO 34071 8-9-68	24 UP	8-15-68	
C	REC CHG ADDED -1 CONFIG	N/A	8-19-68	
D	ECO 35200 10-31-68	1 UP	12-2-68	
E	REC CHG ADDED -2 CONFIG	N/A	12-3-68	
F	REC CHG ADDED -3 CONFIG	N/A	12-4-68	
G	ECO 37072 (5-29-69)	SEE ECO	5-29-69	
H	ECO 37643 (8-6-69)	1 UP	8-29-69	
J	ECO 37844 (8-21-69)	1 UP	8-29-69	
K	REC CHG. ADDED -4 CONFIG	N/A	8-29-69	
L	REC CHG ADDED -5 CONFIG	N/A	11-6-70	
M	REC CHG ADDED -6 CONFIG	N/A	[illegible]	
N	ECO 40271 (5-70) IMPROVE GRD	SEE ECO	5-27-70	
P	ECO 41429 ADDED ITEM 13	PER ECO	9-27-71	
R	ECO 41522 ADD ITEMS 15 & 16 NOTES 9 & 10	1 UP	11-6-70	
S	ECO 41871 ITEM 17 ADD'D FOR -6 & -5	1-26-71	11-19-71	
T	ECO 0400538 CORRECTED HDW	3-8-83	3-25-83	

NOTES CONTINUED:

7. FOR -6 CONFIG INSTALL ITEM 2 (CONN) IN J6' THRU J15' CARD SLOTS; ITEM 10 (CONN) IN J1' CARD SLOT; ITEM 3 (CARD GUIDES) IN J1', J2', AND J8' THRU J15' CARD SLOT LOCATIONS.
8. ITEM 14 INSTALLED BETWEEN CARD SLOT 8 AND 9 ON FRONT OF CARD CHASSIS ON -2 CONFIG AND -3 CONFIG.
9. FOR -6 INSTALL TERMINALS AT 'J3' & J5' HOLES (THIS END ONLY) & SOLDER ITEM 16 ACROSS TERMINALS. HAND STAMP 'GBI' BETWEEN TERMINALS.
10. FOR -6 INSTALL ITEM 12 ONLY AT SHIELD SLOT NEXT TO 'J8' USING ITEMS 4, 6 & 7.

Figure 5-1A. Model 4142 PBW Tunable Discriminator Major Assembly Locations

NOTES

1. ITEM 10 & ASSOCIATED ITEMS 3,4,6,7,8,&9 INSTALLED AT THIS POSITION ON -1 CONFIG. ONLY. THIS POSITION IS LEFT BLANK ON BSC CONFIG.
2. ON -2 CONFIG.: ITEM 2, CONN, IS TO BE ASSEMBLED IN J5, J5, J6, J7, J10, J11, J12, J14 & J15. ITEM 10, CONN. IS TO BE ASSEMBLED IN J16 J8 CARD SLOTS. CARD GUIDE, ITEM 3, LOCATIONS TO CORRESPOND TO CONN. LOCATIONS. ITEM 11, SHIELD, IS TO BE MOUNTED IN CARD SLOTS 4 & 5 AND BETWEEN CARD SLOTS 5 & 6, 6 & 7, 7 & 8.
3. DASH 3 (-3) CONFIG SAME AS -2 EXCEPT CONN. & CARD GUIDES ARE NOT IN J16, J14 CARD SLOTS.
4. ITEM 12 INSTALLED AT CARD SLOT 8 WITH ITEM 11 ON DASH 2 (-2), DASH 3 (-3), DASH 4 (-4), & DASH 5 (-5) CONFIG ONLY.
5. DASH 4 (-4) CONFIG.: ITEM 2 (CONN) IS TO BE ASSEMBLED IN J8, J10, J11, J12 & J15 CARD SLOTS. ITEM 10 (CONN) IS TO BE ASSEMBLED IN J1 CARD SLOT. CARD GUIDE, ITEM 3, LOCATIONS TO CORRESPOND TO CONN. LOCATIONS.
6. FOR -5 CONFIG INSTALL: ITEM 2 (CONN) IN J6 THRU J15 CARD SLOTS; ITEM 10 (CONN) IN J1, J2, J3, J5, J7, J9, J11, J13 & J15 CARD SLOT LOCATIONS.

-DASH	PART NO	DESCRIPTION	PART CLASS	MFG CODE	ITEM OR SYMBOL
		A 04-89-20425 FOR PARTS LIST SEE P/L 14980-4			
		A 04-89-20426 FOR PARTS LIST SEE P/L 14980-3			
		A 04-89-20427 FOR PARTS LIST SEE P/L 14980-2			
		A 04-89-20428 FOR PARTS LIST SEE P/L 14980-1			
		A 04-89-20429 FOR PARTS LIST SEE P/L 14980			

LIST OF MATERIALS

UNLESS OTHERWISE SPECIFIED — TOLERANCES — MATERIAL — TREATMENT OR FINISH — DO NOT SCALE DRAWING

FAIRBROTHER 3-16-72 — FAIRBROTHER 3-16-72

END 3400

Sentac — SARASOTA DIVISION ELECTRO MECHANICAL RESEARCH INC. · SARASOTA, FLORIDA

© EMR INC. 1968

CHASSIS, ASSEMBLY CARD

CODE IDENT NO	SIZE	DWG NO	REV
06141	D	14980	T

SCALE 1/1 — SHEET 1 OF 1

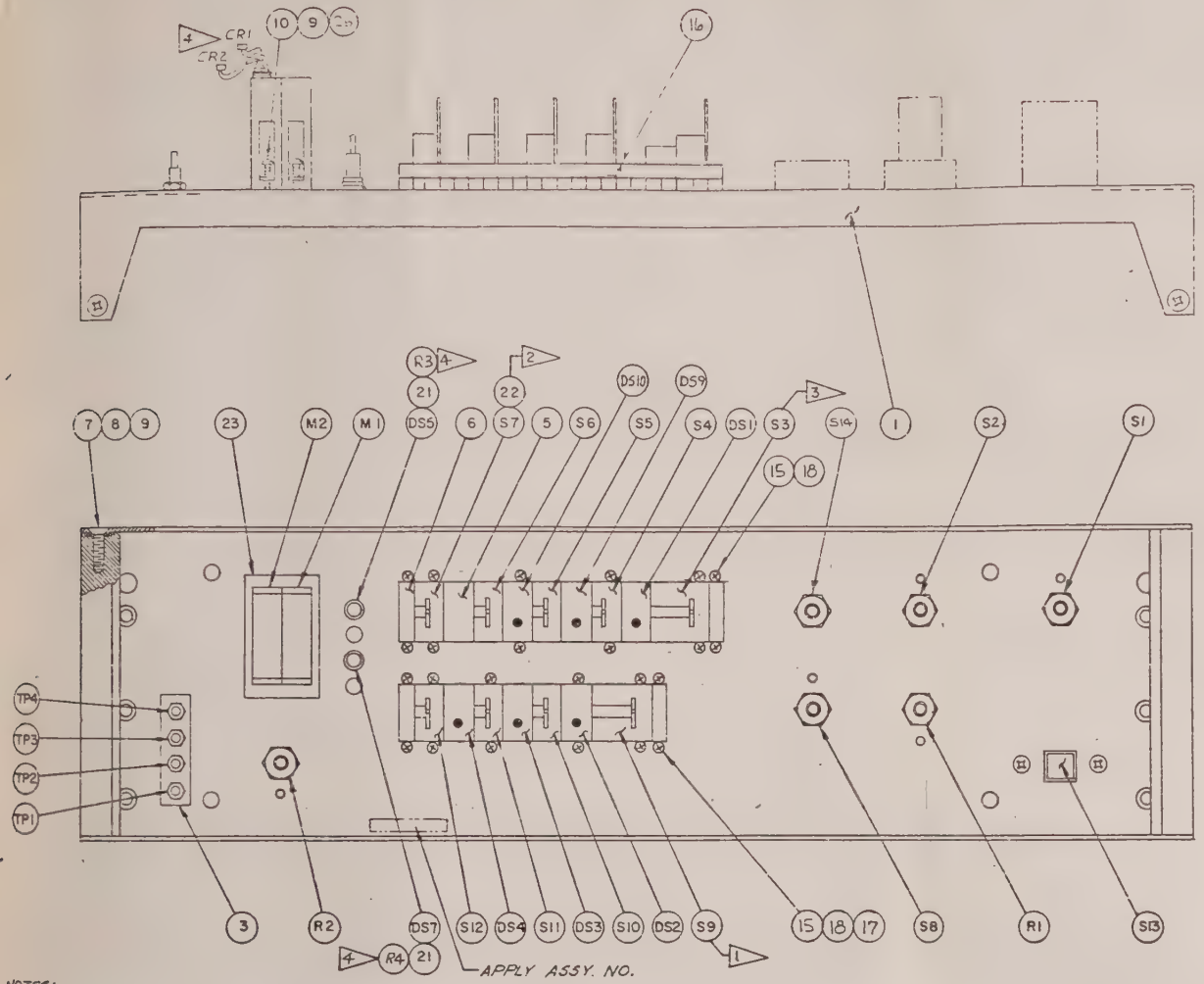

NOTES:

1. PINS, SUPPLIED WITH S9, TO BE INSERTED IN SWITCH ALLOWING KHz, KHz, KHz, Hz, & Hz POSITIONS.
2. PINS, ITEM 22 TO BE INSERTED IN SWITCH ALLOWING ONLY STOPS 0 & 1.
3. PINS, SUPPLIED WITH S3, TO BE INSERTED IN SWITCH ALLOWING KHz, KHz, KHz, & Hz POSITIONS.
4. FOR WIRING SEE WIRING DIAGRAM.

REVISIONS			
SYM	DESCRIPTION	DATE	APPROVED
A	ECO 37068 (5-28-69)	5-28-69	
B	ECO 37519 (7-25-69)	7-25-69	
C	ECO 38240 (10-2-70)	10-2-70	
D	ECO-39756 (3-10-70) ADDED C1, 24, & 25 TO S13 (POWER SWITCH)	3-10-70	

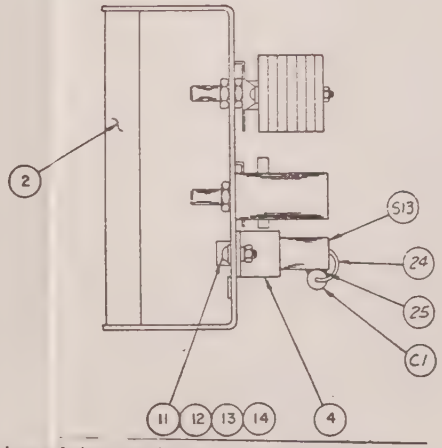

Figure 5-2. Subpanel Assembly A1 Assembly Diagram

191-89-20325 FOR PARTS LIST SEE P/L-17688

REQUIRED	-2	-1	BASIC	LONG SIZE	DESCRIPTION	PART CLASS	MFG CODE	ITEM OR SYMBOL

LIST OF MATERIALS

UNLESS OTHERWISE SPECIFIED

DO NOT SCALE DRAWING

MATERIAL

TREATMENT OR FINISH

APPROVED 5-11

SARASOTA DIVISION ©1968 ELECTRO-MECHANICAL RESEARCH, INC. • SARASOTA, FLORIDA

PANEL, ASSEMBLY SUB.

CODE IDENT NO	SIZE	DWG NO	REV
06141	D	17688	K

SCALE FULL | 191-89-20325 | SHEET 1 OF 1

17688

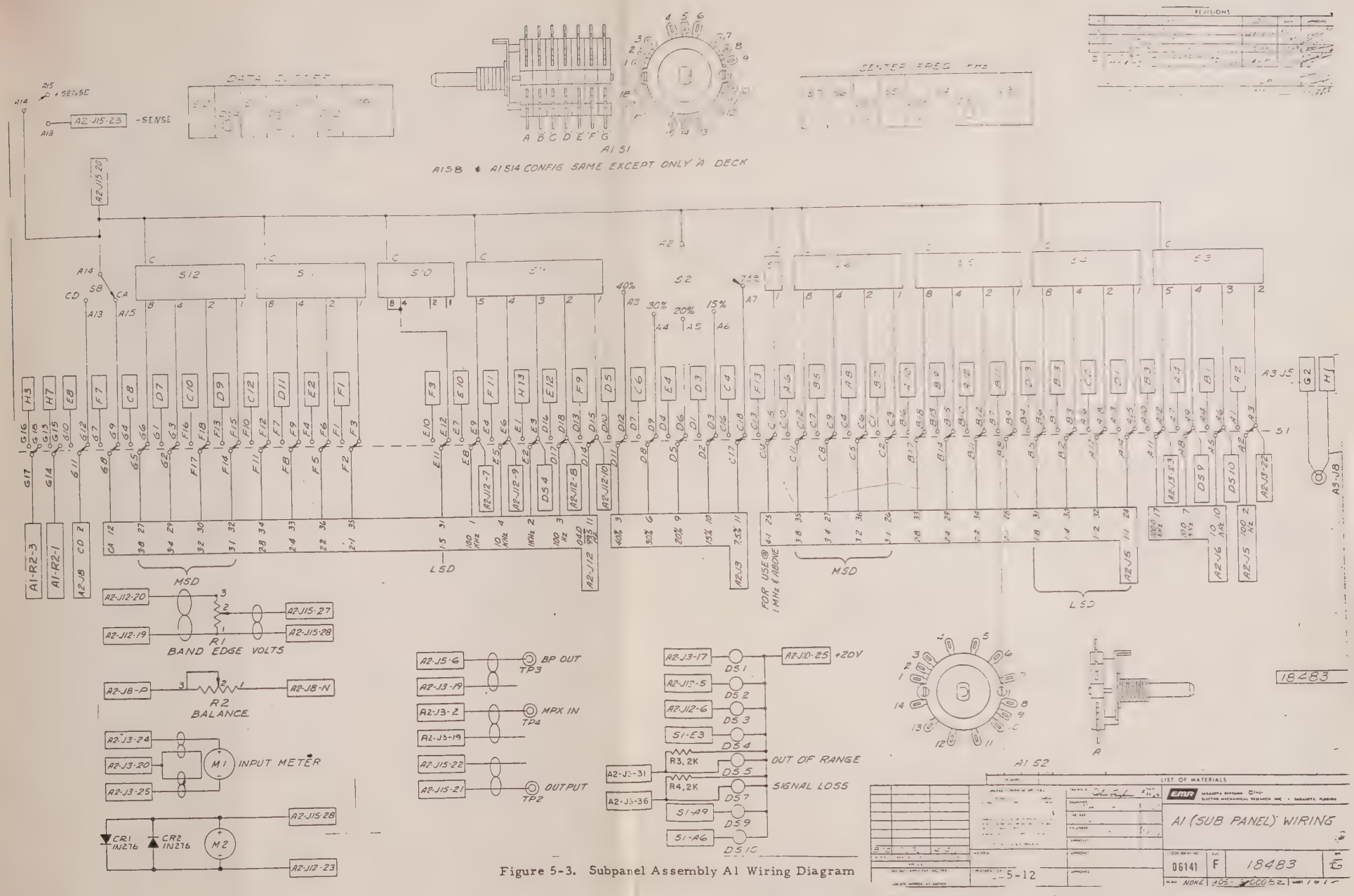

Figure 5-3. Subpanel Assembly A1 Wiring Diagram

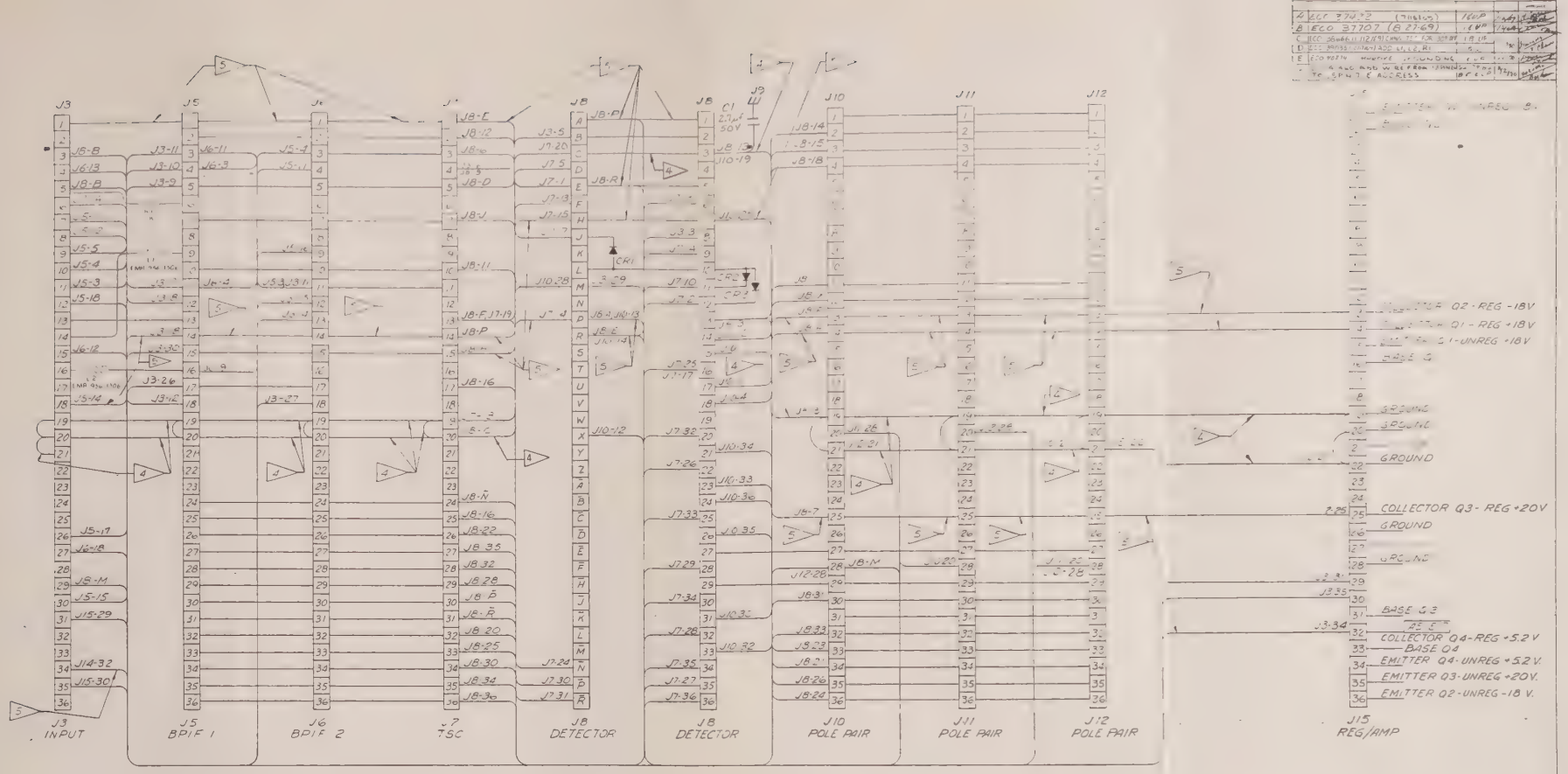

NOTES:

1. DIODES; CR1, CR2, & CR3, ARE IN4148 (EMR NO 088-10-41480)
2. WIRING IS #24 AWG (EMR NO 276-98-00102) UNLESS OTHERWISE SPECIFIED

4 1/8 INCH BRAIDED SHIELD (EMR NO 232-98-00004)

5 #20 AWG WIRE (EMR NO 276-98-00078)

18482

Figure 5-4 (Sht. 1 of 6). Card Chassis A2 Wiring Diagram (4142-01)

A2(CARD FILE) WIRING MODEL 4142-01

06141 E 18482 F

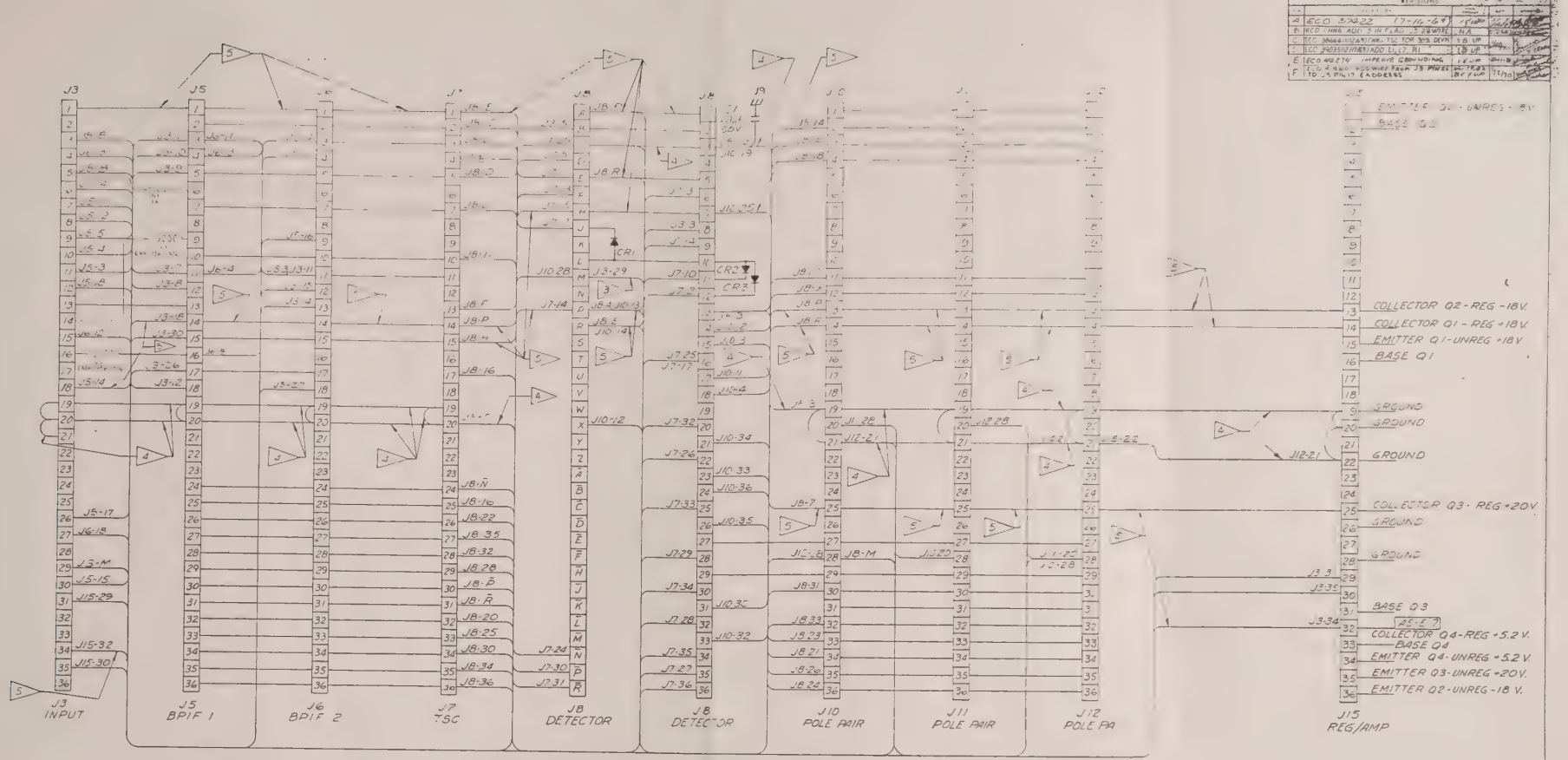

NOTES:

1. DIODES; CR1, CR2, & CR3, ARE IN4148 (EMR NO 088-10-41480)
2. WIRING IS #24 AWG (EMR NO 276-98-00102) UNLESS OTHERWISE SPECIFIED

4 ⅛ INCH BRAIDED SHIELD (EMR NO 232-98-00004)

5 #20 AWG WIRE (EMR NO 276-98-00070)

16786

Figure 5-4 (Sht. 2 of 6). Card Chassis A2 Wiring Diagram (4142-02)

A2 (CARD FILE) WIRING
MODEL 4142-02.

06141 E 16786 F

5-14

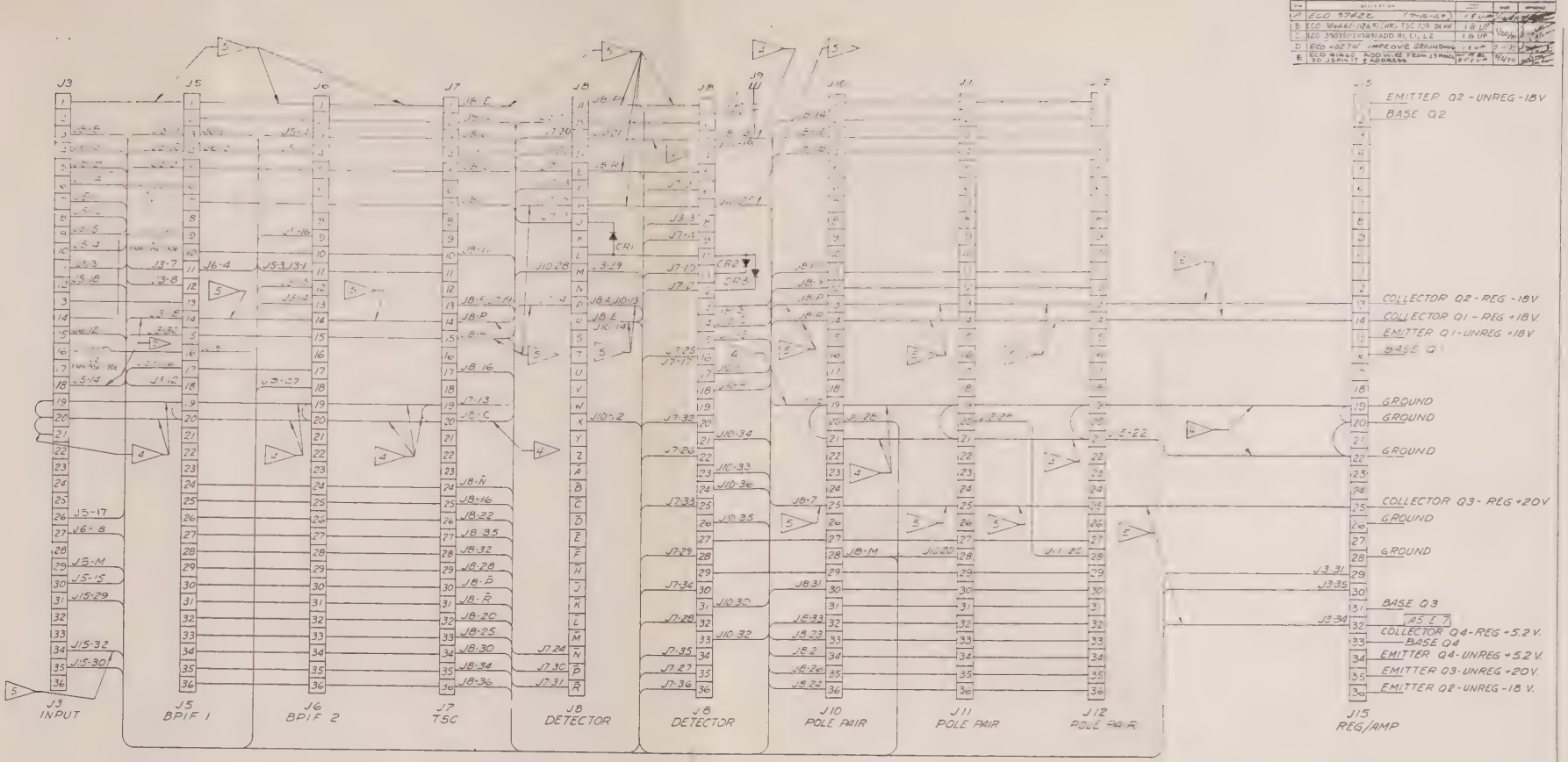

NOTES:

1. DIODES; CR1, CR2, & CR3, ARE IN4148 (EMR NO. 088-10-41480)
2. WIRING IS #24 AWG (EMR NO 276-98-00102) UNLESS OTHERWISE SPECIFIED

4 1/8 INCH BRAIDED SHIELD (EMR NO 232-98-00004)

5 #20 AWG WIRE (EMR NO 276-98-00020)

16787

Figure 5-4 (Sht. 3 of 6). Card Chassis A2 Wiring Diagram (4142-03)

A	ECO 37622 (7-10-69)	I.F.W.	
B	ECO 38486 (12-8-69) ADD TSC TOR DWN	1 & UP	
C	ECO 39035 (2-10-69) ADD R1, L1, L2	1 & UP	
D	ECO 40270 IMPROVE GROUNDING	1 & UP	
E	ECO 41660 ADD WIRE FROM J5 PIN 36 TO J5 PIN 17 & ADD A1B8	1 & UP	

A2(CARD FILE) WIRING
MODEL 4142-03

D6141	E	16787	E

5-15

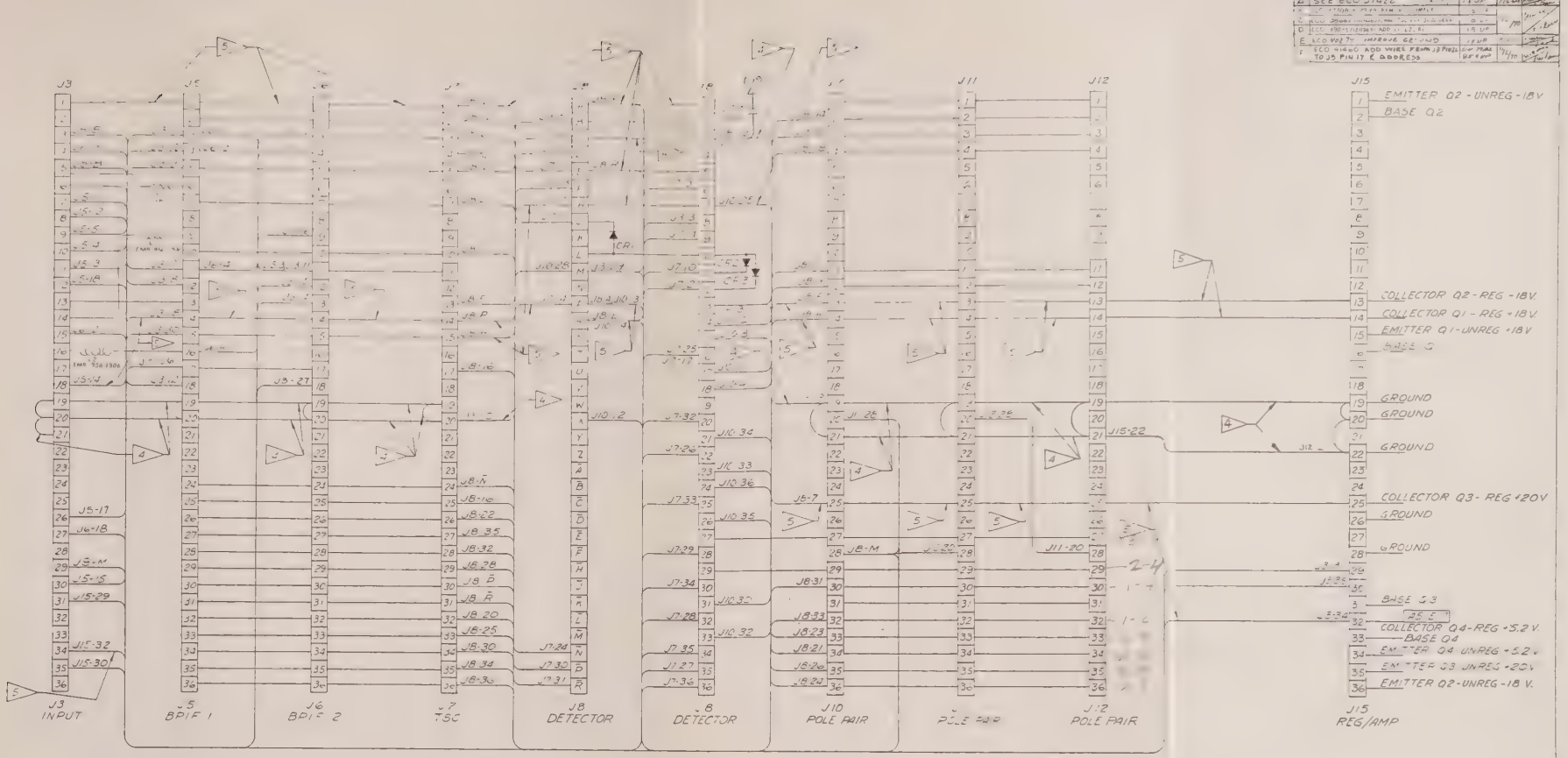

NOTES:

1. DIODES; CR1, CR2, & CR3, ARE IN4148 (EMR NO 088-10-41480)
2. WIRING IS #24 AWG (EMR NO 276-98-00102) UNLESS OTHERWISE SPECIFIED

4 ⅛ INCH BRAIDED SHIELD (EMR NO 232-98-00084)

5 #20 AWG WIRE (EMR NO 276-98-00070)

17683

Figure 5-4 (Sht. 4 of 6). Card Chassis A2 Wiring Diagram (4142-04)

A2 (CARD FILE) WIRING MODEL 4142-04			
5-16	05141	E	17683
	NONE	902-13-00103	SHT 1 OF 1

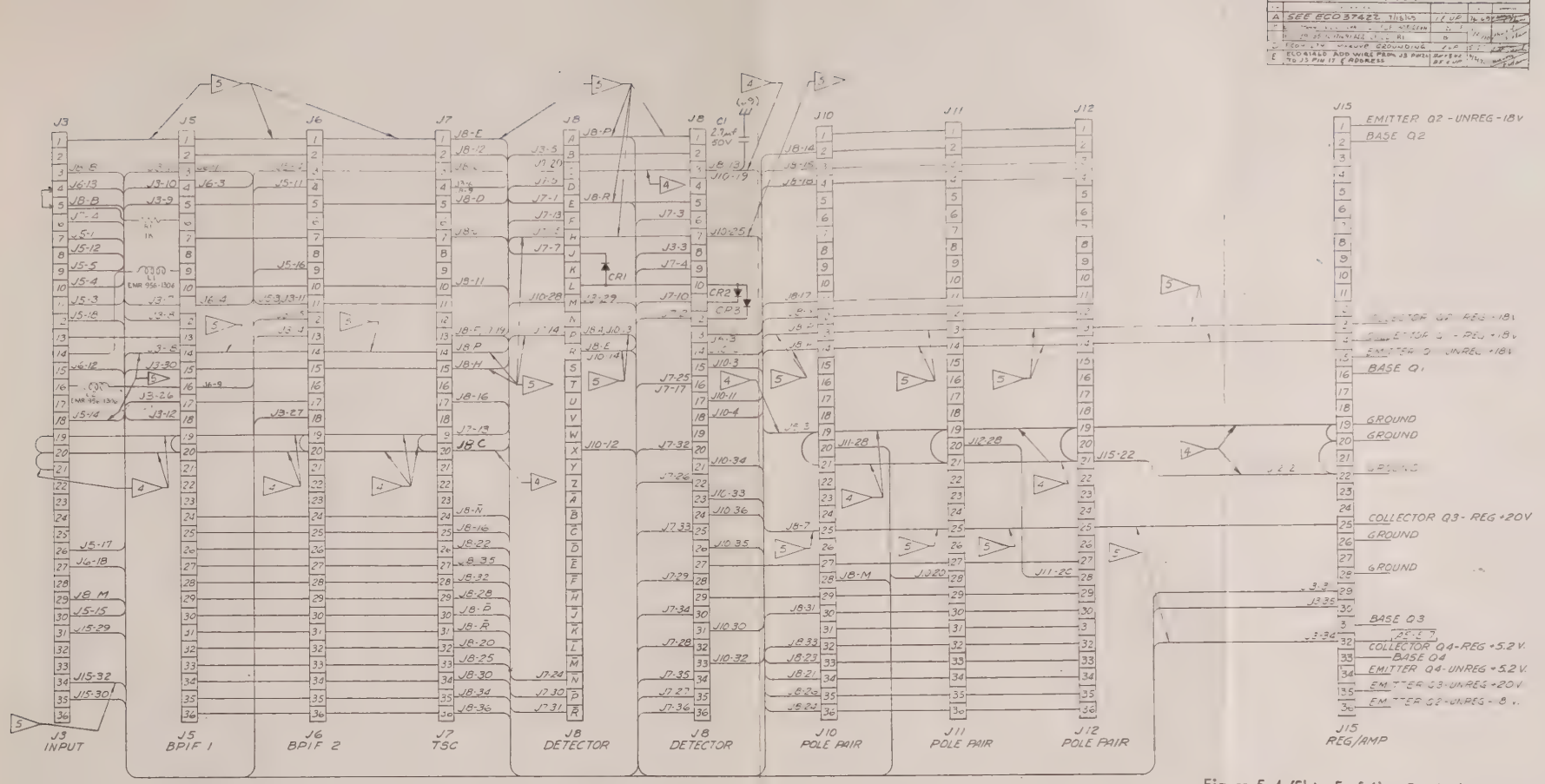

Figure 5-4 (Sht. 5 of 6). Card Chassis A2 Wiring Diagram (4142-05)

NOTES:

1. DIODES; CR1, CR2, & CR3, ARE IN4148 (EMR NO 088-10-41480)
2. WIRING IS #24 AWG (EMR NO 276-98-00102) UNLESS OTHERWISE SPECIFIED

18481

4 ⅛ INCH BRAIDED SHIELD (EMR NO 232-98-00004)

5 #20 AWG WIRE (EMR NO. 276-98-00070)

A2(CARD FILE) WIRING
MODEL 4142-05

06141 E 18481 E

NONE 90513-00102

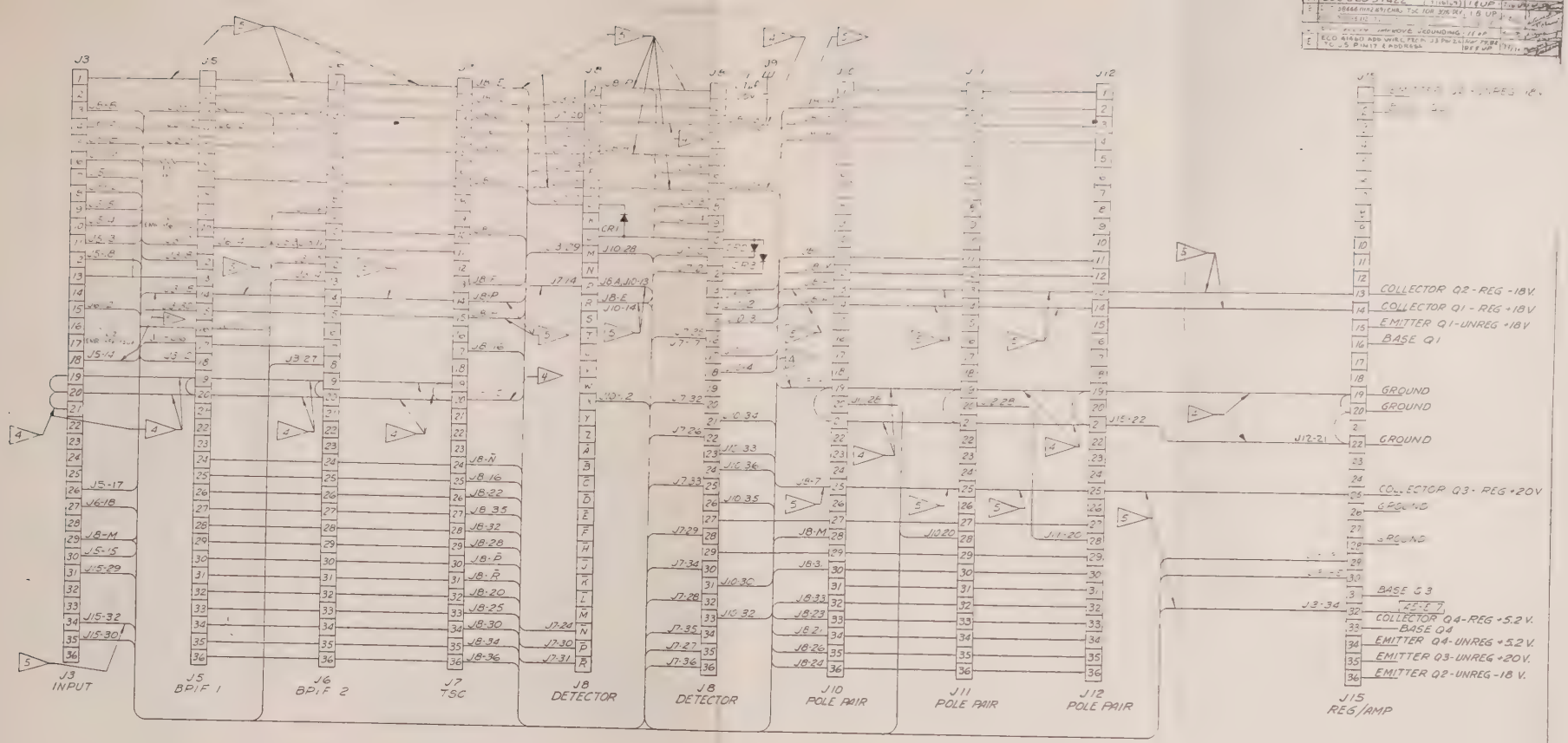

NOTES:

1. DIODES; CR1, CR2, & CR3, ARE 1N4148 (EMR NO. 088-10-41480)
2. WIRING IS #24 AWG (EMR NO. 276-98-00102) UNLESS OTHERWISE SPECIFIED.

4 ⟩ 1/8 INCH BRAIDED SHIELD (EMR NO. 232-98-00004)

5 ⟩ #20 AWG WIRE (EMR NO. 276-98-00070)

Figure 5-4 (Sht. 6 of 6). Card Chassis A2 Wiring Diagram (4142-05)

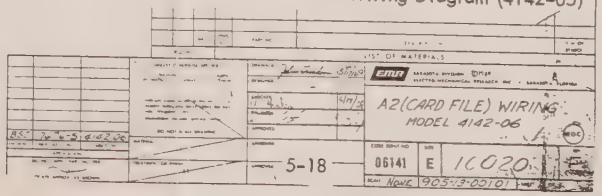

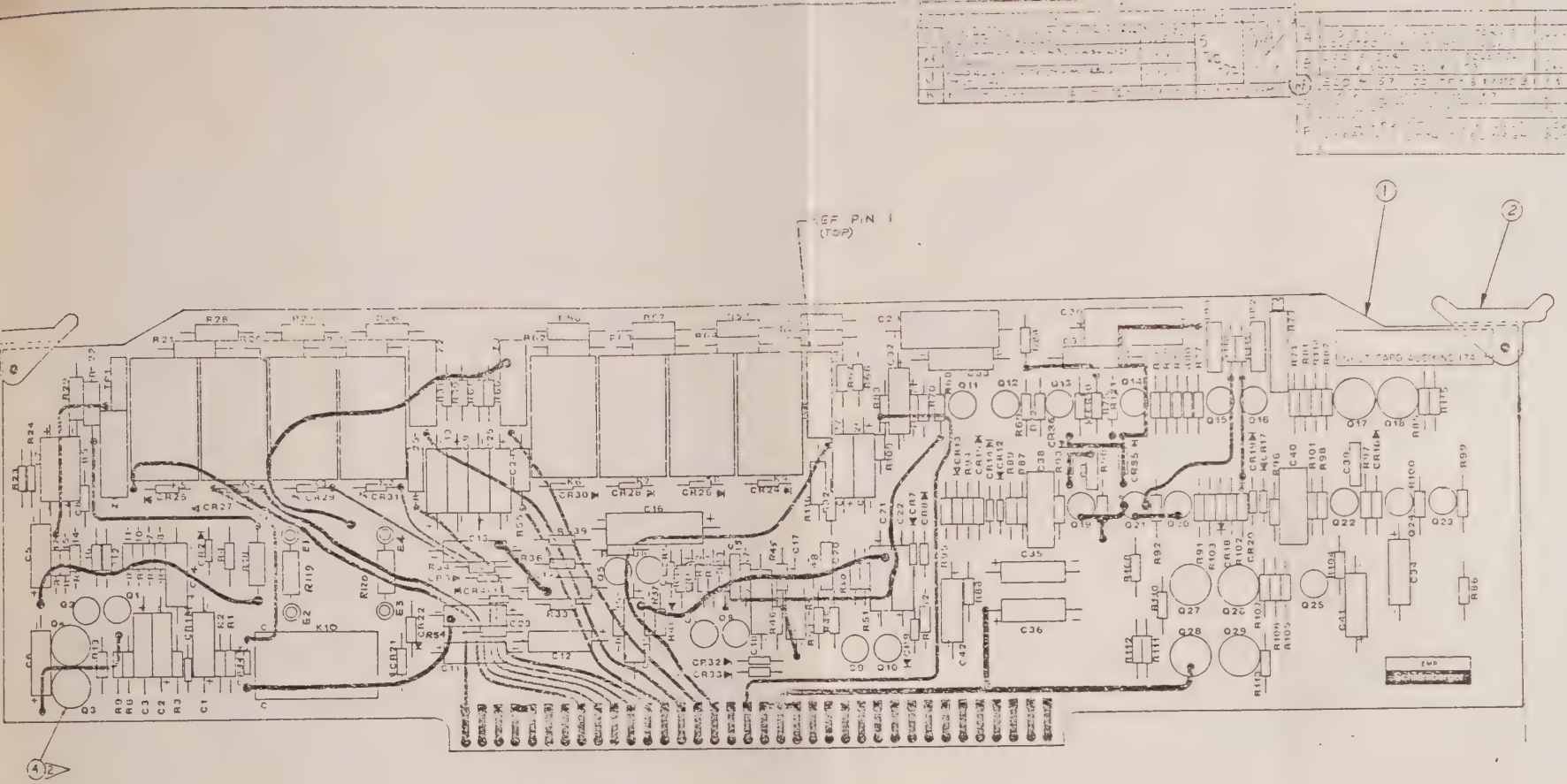

NOTE:

4 ITEM "4 USED UNDER Q3,Q4.

Figure 5-5. Input Card A2A3 Assembly Diagram

A	205-89-00711	FOR PARTS LIST SEE PL-17405	

PRINTED-WIRING ASSEMBLY
INPUT CARD

06141	D	17405	
2/1	205-89-00711		

BSC 17630 4143
BSC 17630 4142

17405

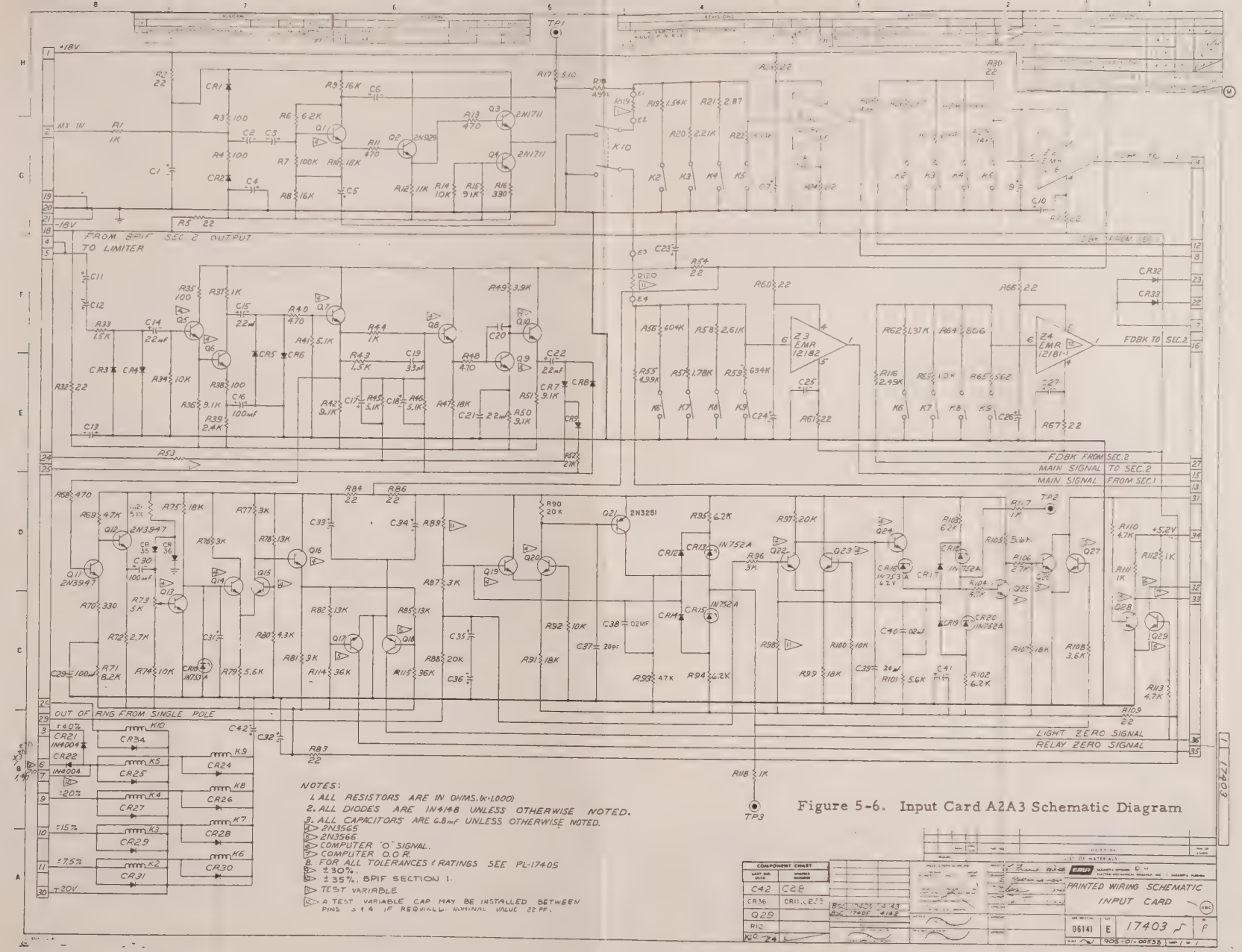

NOTES:
1. ALL RESISTORS ARE IN OHMS. (K=1000)
2. ALL DIODES ARE IN4148 UNLESS OTHERWISE NOTED.
3. ALL CAPACITORS ARE 6.8mF UNLESS OTHERWISE NOTED.
△ 2N3565
△ 2N3566
△ COMPUTER "0" SIGNAL.
△ COMPUTER 0.0.R.
8. FOR ALL TOLERANCES & RATINGS SEE PL-17405
△ ±30%.
△ ±35%. BPIF SECTION 1.
△ TEST VARIABLE
△ A TEST VARIABLE CAP MAY BE INSTALLED BETWEEN PINS 5 & 6 IF REQUIRED. NOMINAL VALUE 22 PF.

Figure 5-6. Input Card A2A3 Schematic Diagram

COMPONENT CHART	
LAST IND. VALUE	WIRELESS NUMBERS
C42	C28
CR36	CR11, CR23
Q29	
R112	
K10	24

EMR — PRINTED WIRING SCHEMATIC
INPUT CARD
06141 | E | 17403 | P
905-01-00538

17403

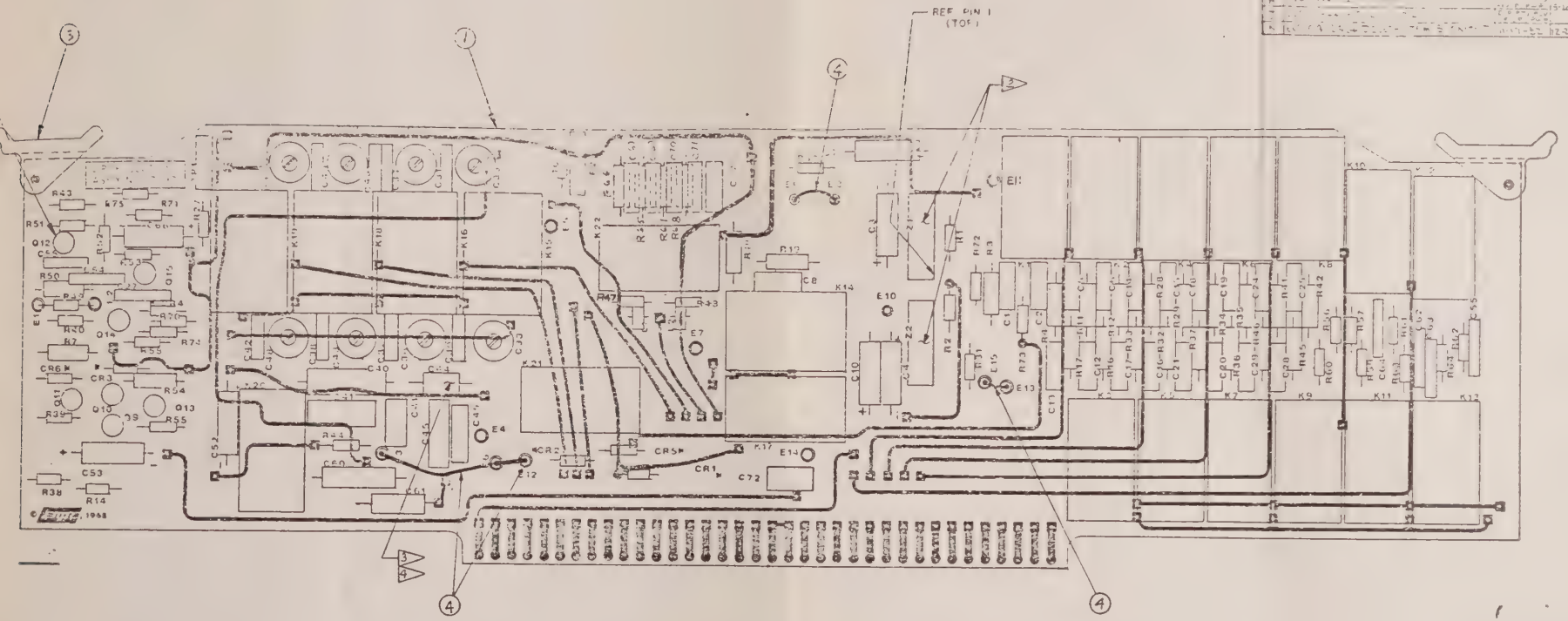

NOTE:

1. TRANSIPADS USED UNDER ALL TRANSISTORS.
2. CLIP TOP LEAD (#12) OF Z1 & Z2 FLUSH WITH SURFACE OF COATING.
3. VALUE MAY BE CHANGED BY TEST.
4. COMBINATION OF CAPACITORS MAY BE USED FOR TOTAL VALVE.
5. JUMPER WIRES MAY BE REMOVED FOR TEST.
6. THE FOLLOWING CAPACITORS MAY HAVE THEIR VALUES CHANGED BY TEST : C9, 30, 31, 32, 34, 38, 45, 46, 49, 54 & 41

Figure 5-7. BPIF Section 1 Card A2A5 Assembly Diagram

A 205-89-00721 FOR PARTS LIST SEE PL-17390

LIST OF MATERIALS

PRINTED-WIRING ASSEMBLY
B.P.I.F SEC. #1

06141 D 17390 K

205-89-00721

LAST NO	UNUSED NOS
C72	C9, C11, C22, C23, C26, C50, C51, C56, C57, C58 & C59
K22	
L2	
Q15	Q1 – Q8
R75	R5, R6, R8–R10, R13, R15 1RZ0–R26
TP2	
E15	
Z2	
CR6	

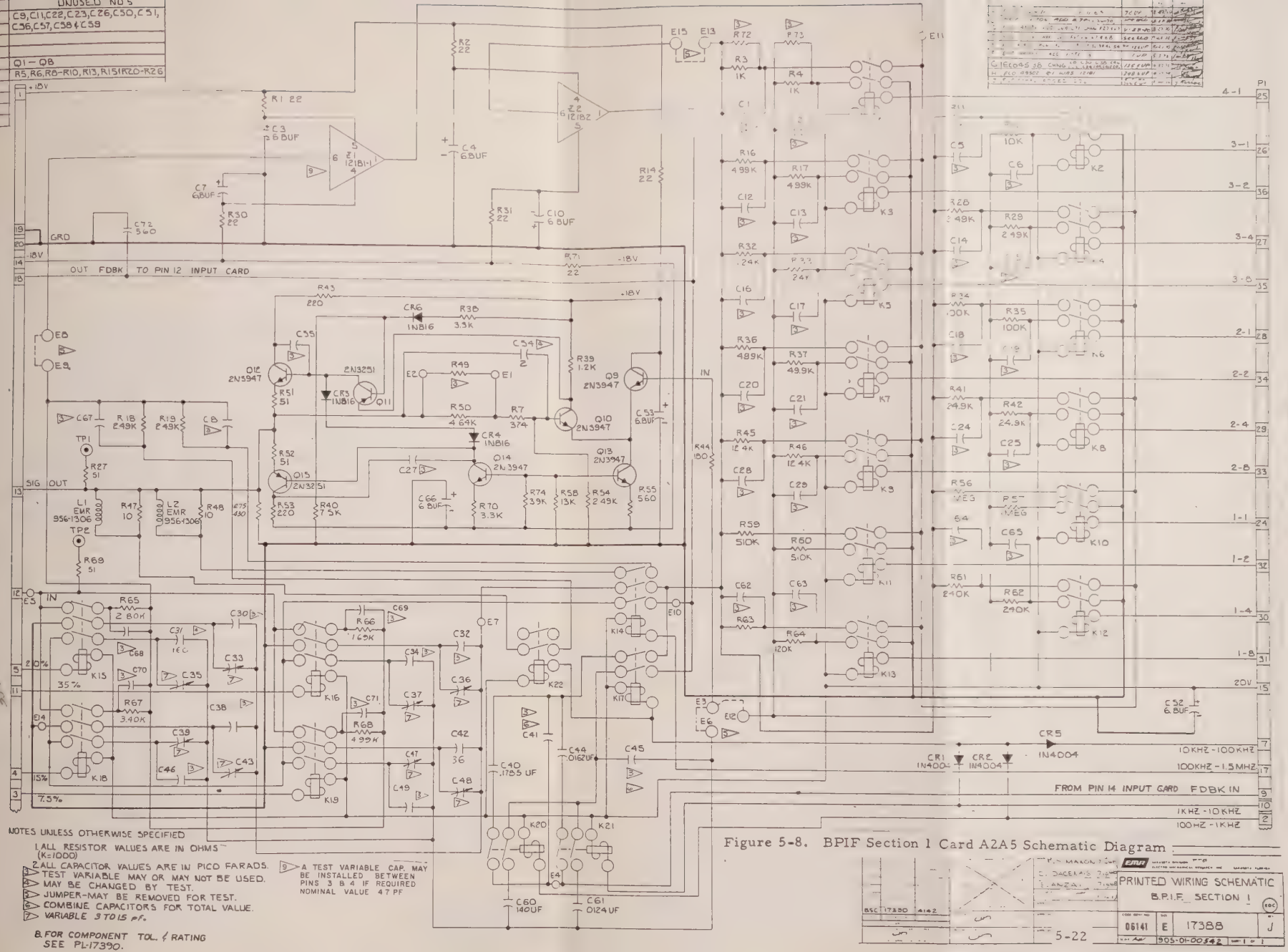

NOTES UNLESS OTHERWISE SPECIFIED

1. ALL RESISTOR VALUES ARE IN OHMS (K=1000)
2. ALL CAPACITOR VALUES ARE IN PICO FARADS.
3. TEST VARIABLE MAY OR MAY NOT BE USED.
4. MAY BE CHANGED BY TEST.
5. JUMPER-MAY BE REMOVED FOR TEST.
6. COMBINE CAPACITORS FOR TOTAL VALUE.
7. VARIABLE 3 TO 15 pf.
8. FOR COMPONENT TOL. & RATING SEE PL-17390.
9. A TEST VARIABLE CAP. MAY BE INSTALLED BETWEEN PINS 3 & 4 IF REQUIRED NOMINAL VALUE 47 PF

Figure 5-8. BPIF Section 1 Card A2A5 Schematic Diagram

PRINTED WIRING SCHEMATIC
B.P.I.F. SECTION 1

CODE IDENT NO	SIZE	DWG NO
06141	E	17388

SCALE | SHEET 905-01-00542 | REV J

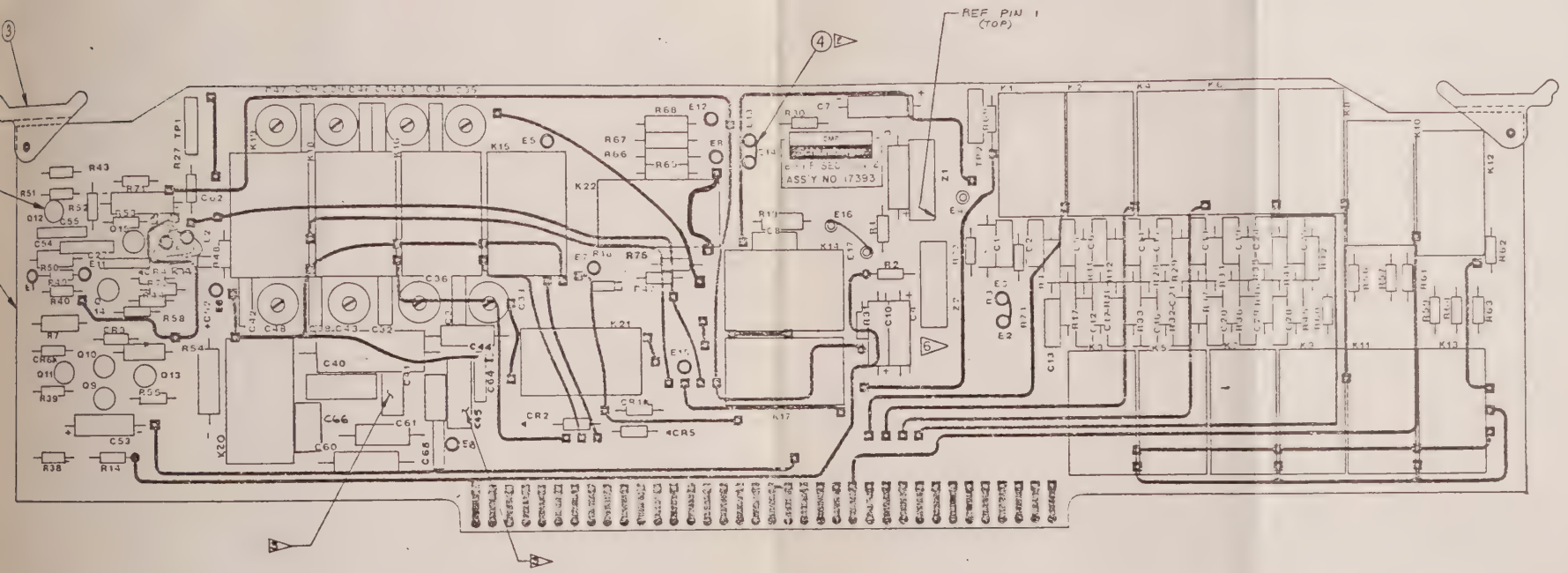

NOTE:

1 TRANSIPADS USED UNDER ALL TRANSISTORS.

▷ JUMPER, ITEM #4, USED BETWEEN E2 & E3, E13 & E14, E16 & E17 MAY BE REMOVED FOR TEST.

▷ VALUE OF C41 & C45 MAY BE DERIVED BY COMBINATION OF DM-19 & DM-15. MAY BE CHANGED BY TEST.

4. MAX. ASSY. HEIGHT A. COMPONENT SIDE .532
   B. NONCOPONET SIDE .093

5. THE FOLLOWING CAPACITORS MAY HAVE THEIR VALUES CHANGED BY TEST: C30, 31, 32, 34, 38, 45, 46 & 54.

▷ WHEN INSTALLING Z2 PLACE ITEM 5 THEN ITEM 6 ON OUTSIDE LEADS ONLY. LEAVE ENOUGH SLACK ON LEADS TO BEND Z2 TOWARD C4 TO MEET HEIGHT REQUIREMENT.

Figure 5-9. BPIF Section 2 Card A2A6 Assembly Diagram

A 205-89-00722 FOR PARTS LIST SEE PL17393

BSC 17680 4193
BSC 17676 4193

PRINTED-WIRING ASSEMBLY
B.P.I.F. SEC. 2

D 17393 R

205-89-00722

5-23

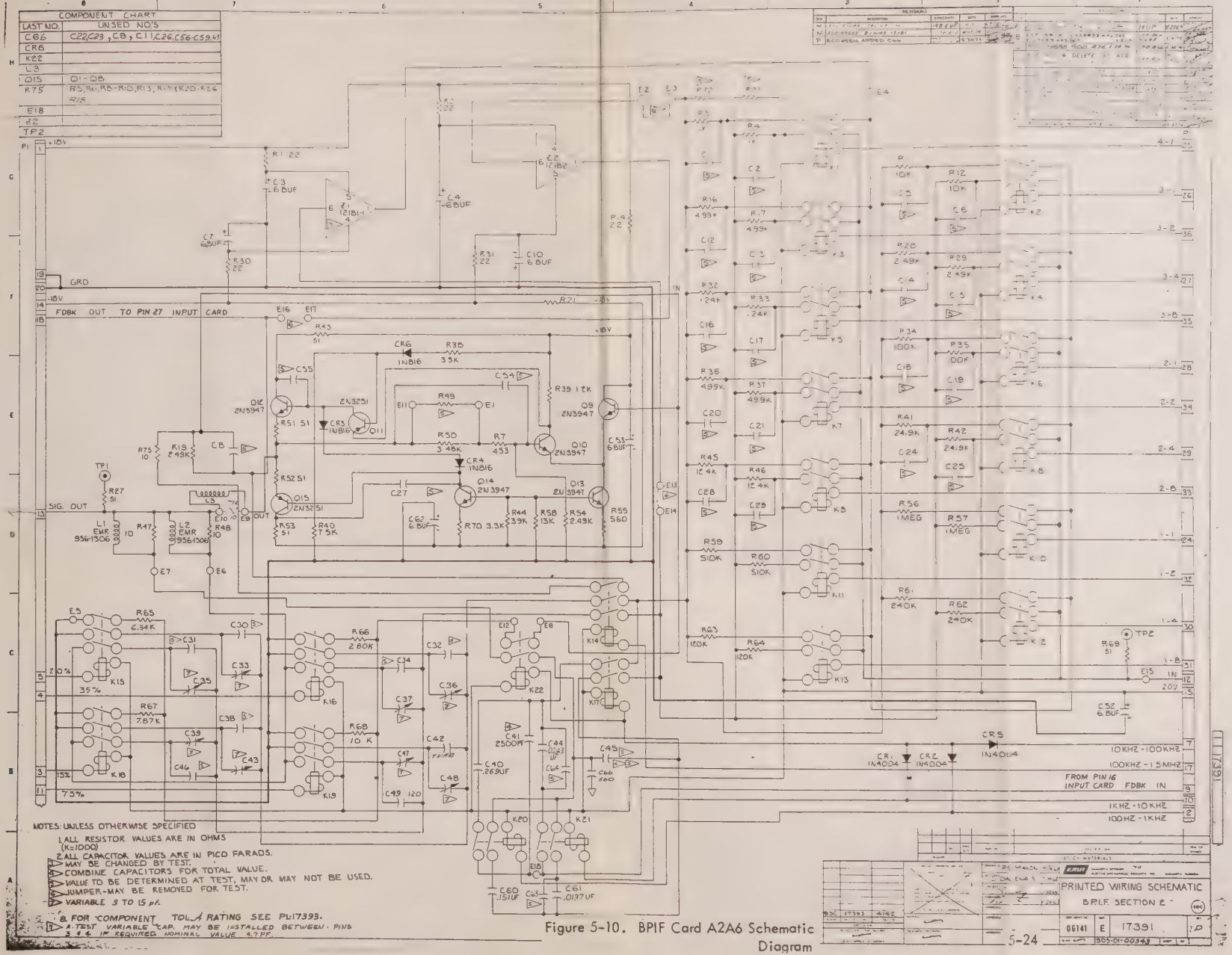

Figure 5-10. BPIF Card A2A6 Schematic Diagram

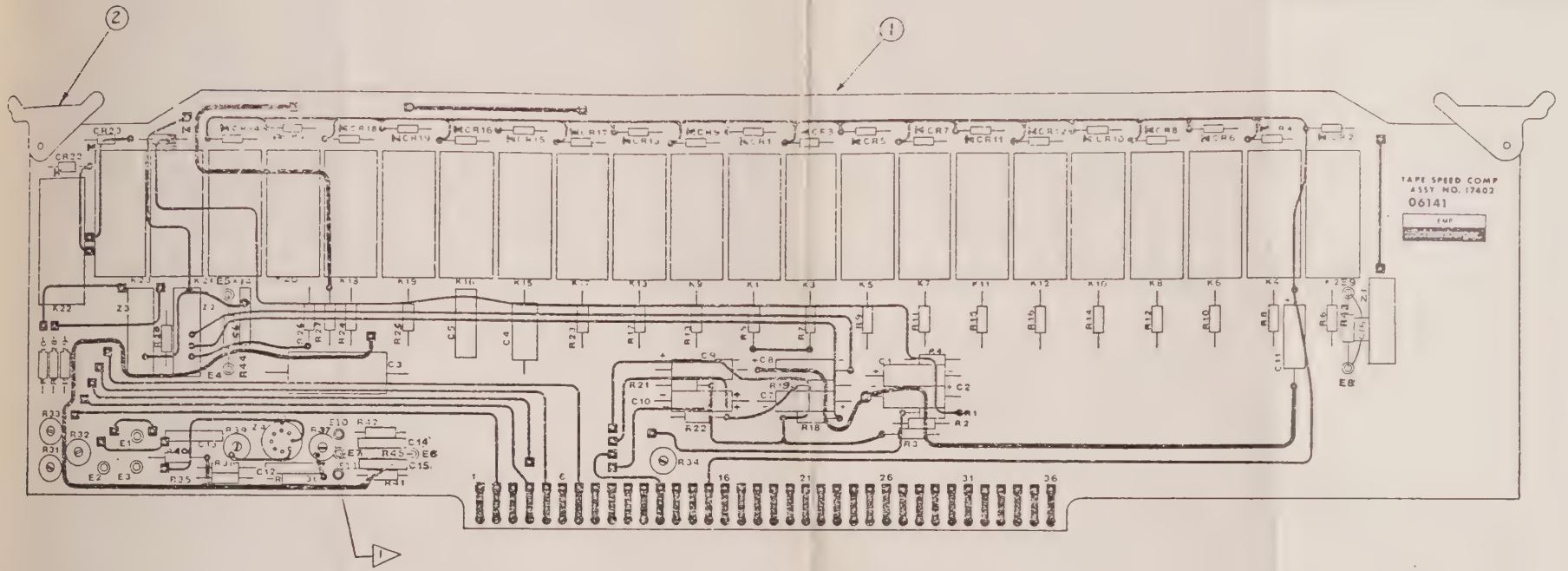

Figure 5-11. TSC Card A2A7 Assembly Diagram

	X	A	20529-00723	FOR LIST OF MATERIALS, SEE P-17402			—
-2 REQUIRED	-1 BASIC	DWG SIZE	PART NO.	DESCRIPTION	PART CLASS	MFG CODE	ITEM OR SYMBOL

LIST OF MATERIALS

DRAWN BY	T. REESE	5-69
DESIGNER	S. MARTINO JR.	1-27-69
CHECKED	J. NAVOLIS	1-29-69
DESIGN ENGINEER		
PROJECT ENGINEER	H. ROBERTS	1-30-69
APPROVED		
APPROVED	5-25	

UNLESS OTHERWISE SPECIFIED
DO NOT SCALE DRAWING

SARASOTA DIVISION
ELECTRO-MECHANICAL RESEARCH INC. · SARASOTA, FLORIDA

PRINTED-WIRING ASSEMBLY
TAPE SPEED COMPENSATION

06141	D	17402	H
SCALE 2/1	20-529-00723	SHEET 1 OF 1	

17402

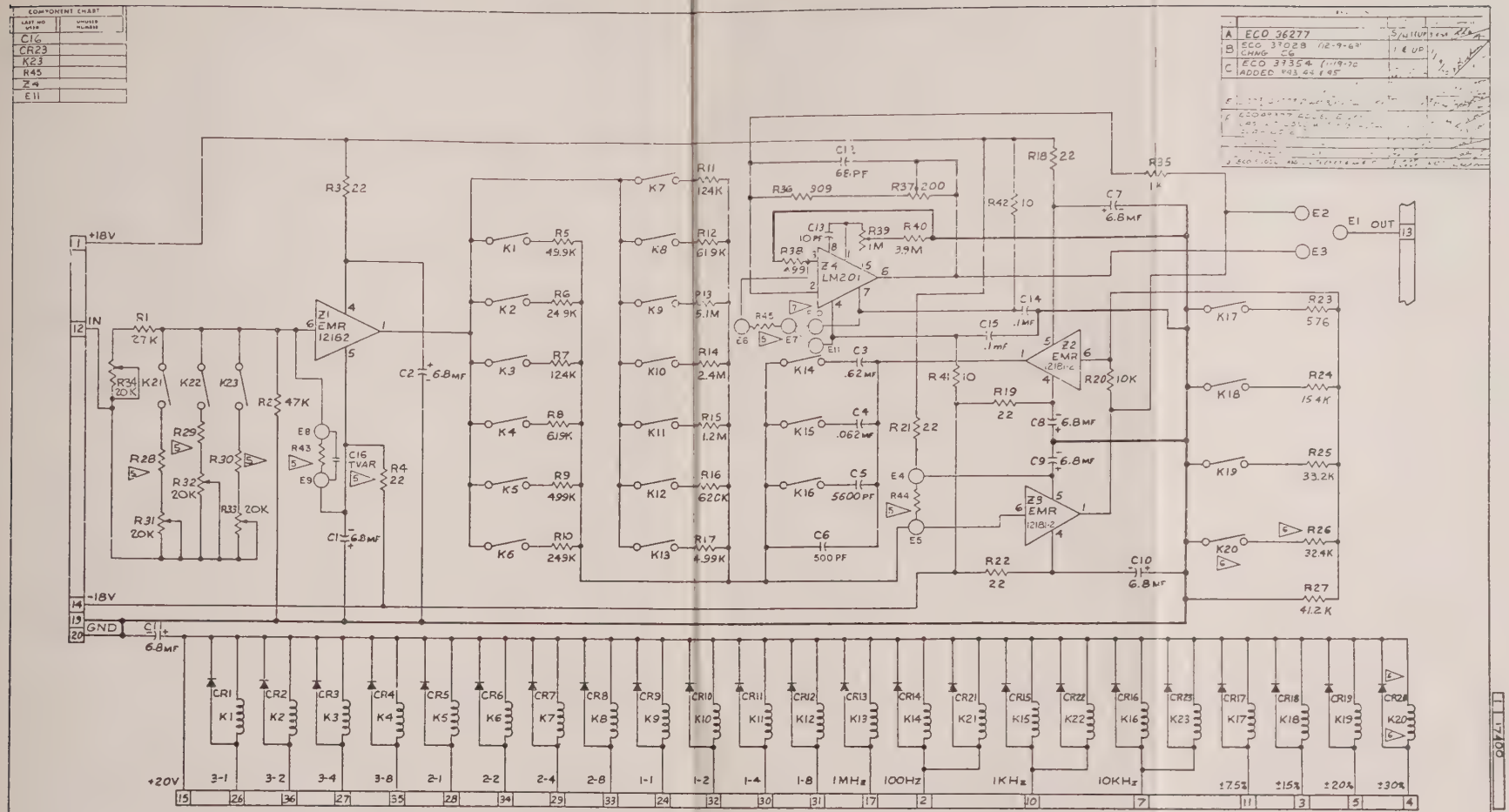

NOTES:

1. ALL RESISTOR VALUES ARE IN OHMS (K=1,000; M=1,000,000)
2. ALL DIODES ARE IN4148.
3. ALL RELAYS ARE HATHAWAY GP-1A-26-P.
4. FOR TOLERANCES AND RATINGS SEE PL-17402.

5 TEST VARIABLE, RANGE FOR R43 & R44 IS 6 MEG Ω TO 18 MEG Ω, R45 IS 43KΩ TO 68KΩ, RANGE FOR C16 IS 0 PF TO 20 PF, NOM. 0.

6 PWA IS LAID OUT FOR APPROPRIATE COMPONENTS BUT ARE NOT USED.

7 FOR +18V OPERATION CONNECT E7 TO E10.
FOR -18V OPERATION CONNECT E7 TO E11.

Figure 5-12. TSC Card A2A7 Schematic Diagram

L. FRIESE
S. MARTINO
J. NAVOLIS
H. ROBERTS

PRINTED-WIRING SCHEMATIC
TSC CARD

17400 J

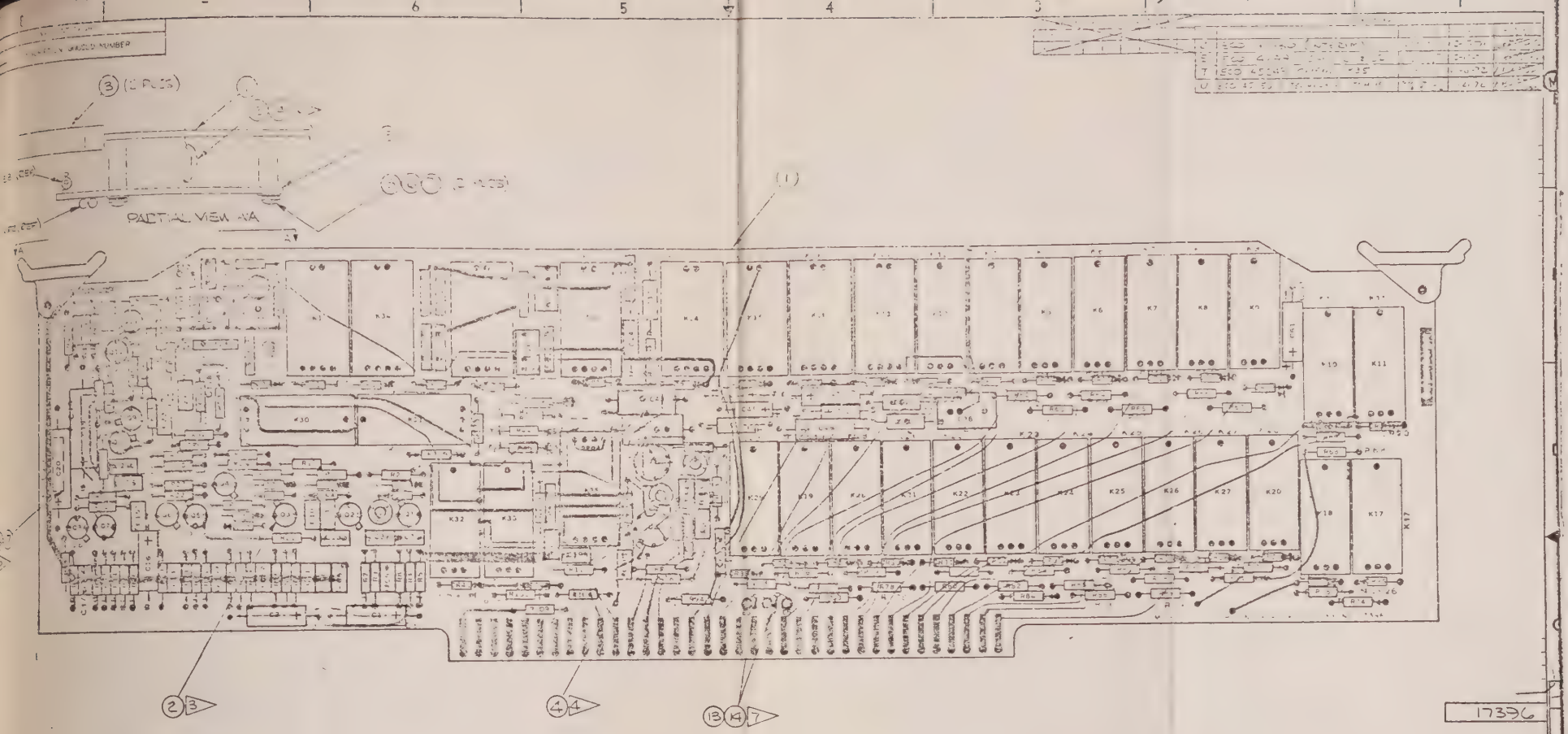

Figure 5-13. Limiter, Detector, and Single Pole Card A2A8 Assembly Diagram

UNLESS OTHERWISE SPECIFIED:
MAX HEIGHT, COMPONENT SIDE .812.
NON-COMPONENT SIDE .093.

CLIP LEAD Nº 4 ON ALL TRANSISTORS.
ITEM 2 USED ON ALL TRANSISTORS.
ITEM 4 USED WITH U1 & U2.
BOND ITEM 16 UNDER C20 TO BOARD USING ITEM 17.
TYPICAL 7 PLACES, FROM ITEM 1 TO ITEM 15 AS FOLLOWS:
E12 - E2 E15 - E6 E18 - E7
E13 - E3 E16 - E5
E14 - E1 E17 - E4
JUMPER E6 TO E7 FOR BSC CONFIGURATION.
JUMPER E5 TO E7 FOR -1 & -2 CONFIGURATION.
DISCARD HEAT SINK CLIP THAT COMES WITH Q1 AND USE ONE HALF OF THE MATCHED PAIR FOR Q1 & THE OTHER HALF FOR Q2.

X	—	—	205-89-007-9	FOR PARTS LIST, SEE PL-17396-2	—
—	X	—	205-89-007-8	FOR PARTS LIST, SEE PL-17396-1	—
—	—	X	205-89-007-10	FOR PARTS LIST, SEE PL-17396	—

PARTS LIST

TELEMETRY

PRINTED-WIRING ASSEMBLY
LIMITER DETECTOR
SINGLE POLE

D 06141 17396 U

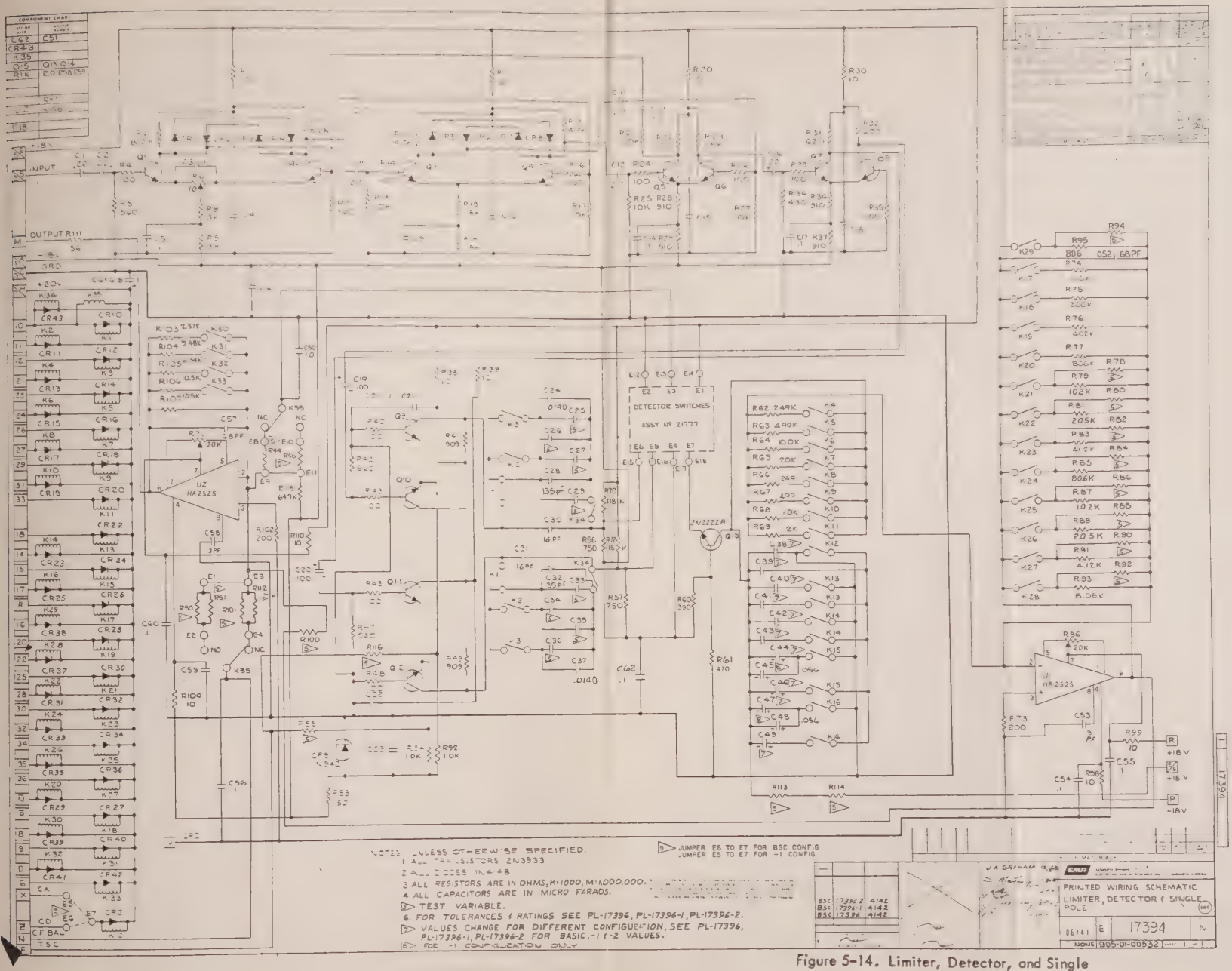

Figure 5-14. Limiter, Detector, and Single Pole Card A2A8 Schematic Diagram

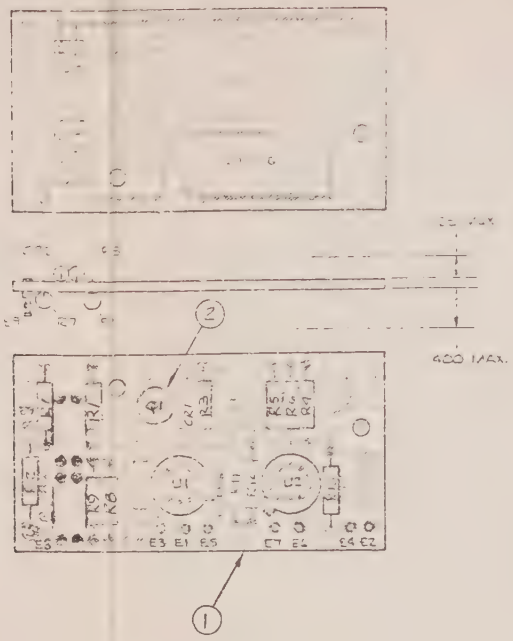

21777

Figure 5-14A. Detector Switches Assembly, Assembly Diagram

		X	A	205-89-01014	FOR PARTS LIST SEE PL-21777			—
-2	-1	BASIC	DWG SIZE	PART NO	DESCRIPTION	PART CLASS	MFG CODE	ITEM OR SYMBOL
REQUIRED				LIST OF MATERIALS				

UNLESS OTHERWISE SPECIFIED

DO NOT SCALE DRAWING

TREATMENT OR FINISH

5-28A

© 1970
SARASOTA DIVISION
ELECTRO-MECHANICAL RESEARCH, INC. • SARASOTA, FLORIDA

PRINTED-WIRING ASSEMBLY
DETECTOR SWITCHES

FSC

CODE IDENT NO	SIZE	DWG NO	REV
06141	C	21777	

SCALE 2/1 | 205-89-01014 | SHEET 1 OF 1

EMR 3 2174 OZALID

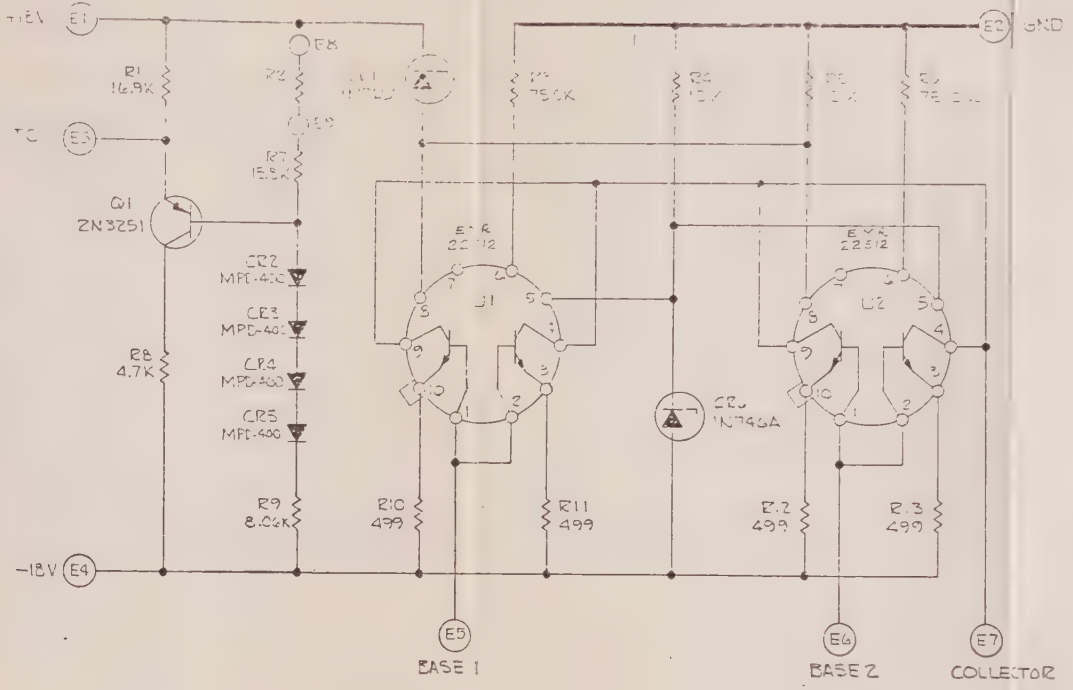

Figure 5-14B. Detector Switches Assembly, Schematic Diagram

21775

NOTE:

1. ALL RESISTOR VALUES IN OHMS (K=1000).
2. FOR RATINGS AND TOLERANCES SEE PL-21777.

REVISIONS

SYM	DESCRIPTION	EFFECTIVITY	DATE	APPROVED
A	[illegible] WAS [illegible]	15UP	12-22-71	

PARTS LIST

-2 REQUIRED	-1	BASIC	DWG SIZE	PART OR IDENTIFYING NO.	NOMENCLATURE OR DESCRIPTION	CODE IDENT	ITEM OR SYMBOL

DASH NO.	NEXT ASSY NO	USED ON
APPLICATION		
DO NOT APPLY PART NO. PER		
LOCATE APPROX AS SHOWN		

UNLESS OTHERWISE SPECIFIED
TOLERANCES: DECIMALS .XX ± .02, .XXX ± .010; ANGLES ± 1°; SURFACES FINISH 125
DIMENSIONS ARE IN INCHES
MATERIAL CLASS 2A OF MIL-I-7742
REMOVE BURRS AND SHARP EDGES .02" MAX
HOLE TOLERANCES PER EMR SPEC 7575
DIMENSIONS INCLUDE APPLIED FINISH
DO NOT SCALE DRAWING

MATERIAL
TREATMENT OR FINISH

	NAME	DATE
DRAWN BY		
DESIGNER		
CHECKER		
DESIGN ENGINEER		
PROJECT ENGINEER		
APPROVED		
APPROVED	5-28B	

©1970 EMR DIVISION OF WESTON INSTRUMENTS, INC. A SCHLUMBERGER COMPANY

EMR TELEMETRY

PRINTED-WIRING SCHEMATIC
DETECTOR SWITCHES

SIZE	CODE IDENT NO.	DRAWING NO.	REV
C	06141	21775	A

SCALE [illegible] SHEET [illegible] OF [illegible]

EMR 3/2/340

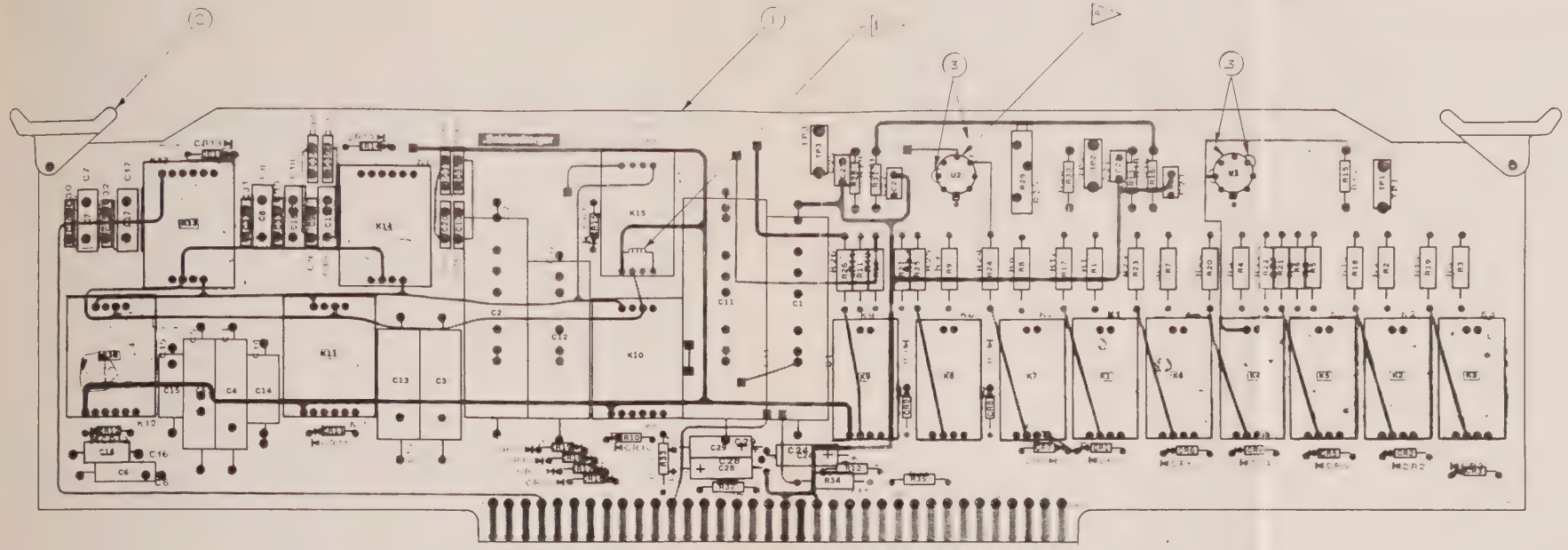

166657

Figure 5-15. Pole Pair Cards A2A10, A2A11, and A2A12 Assembly Diagram

NOTES:

1. COIL SHOWN ON K15 FOR ORIENTATION.
2. MAX HEIGHT, COMPONENT SIDE 2.25", NON-COMPONENT SIDE .093".
3. THE FOLLOWING CAPACITORS MAY HAVE THEIR VALUES CHANGED BY TEST: C9, C10, C19, C20 & C30 THRU C37.
4. FORM ALL LEADS ON U1 & U2 PER DIAGRAM. INSTALL ITEM 3 (BEAD) ON PINS 3 & 6. BEADS MUST NOT TOUCH ADJACENT LEADS. ITEM 4 TO BE USED WITH U1 & U2. INSTALL BEFORE PREFORMING.

U1&U2

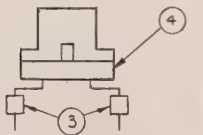

FORMING DIAGRAM 4
(NO SCALE)

CONFIGURATION	CONTROL NO	NOMENCLATURE OR DESCRIPTION	ITEM OR SYMBOL
-5 -4 -3 -2 -1 BASIC			
QTY REQUIRED			
	205-89-00717	FOR PARTS LIST, SEE PL-16657-5	—
	205-89-00716	PL-16657-4	—
	205-89-00715	PL-16657-3	—
	205-89-00714	PL-16657-2	—
	205-89-00713	PL-16657-1	—
	205-89-00712	FOR PARTS LIST, SEE PL-16657	—

PARTS LIST

	17680	4143
-5		
-4		
-3		
-2		
-1		
BSC	7680	4143
DASH NO	NEXT ASSY NO	USED ON

APPLICATION

	7676	4142
-5		
-4		
-3		
-2		
-1		
BSC	7676	4142
DASH NO	NEXT ASSY NO	USED ON

APPLICATION

DO NOT APPLY PART NO. IDENTIFY PER EMR 13406

LOCATE APPROX AS SHOWN

SIMILAR TO

UNLESS OTHERWISE SPECIFIED
TOLERANCES: DECIMALS ANGLES
.X ± .1 ± 1°
.XX ± .05
.XXX ± .010
DIMENSIONS ARE IN INCHES
TOLERANCE APPLIES AFTER FINISH
DO NOT SCALE DRAWING

MATERIAL

TREATMENT OR FINISH

DRAWN BY	L. FRIESE	12-26-68
DESIGNER	S. MARTINO JR.	1-28-69
CHECKER	J. NAVOLIS	1-29-69
DESIGN ENGINEER		
PROJECT ENGINEER	H.W. ROBERTS	1-30-69
APPROVED		
APPROVED	Wm Lalla	12-28-71

EMR TELEMETRY / A DIVISION OF SCHLUMBERGER INSTRUMENTS INC. A SCHLUMBERGER COMPANY

PRINTED-WIRING ASSEMBLY
POLE PAIR

SIZE	CODE IDENT NO.	DRAWING NO	REV
D	06141	166657	J

SCALE: 2/1 | 205-89-00712 | SHEET 1 OF 1

NOTICE TO PERSONS RECEIVING THIS DRAWING: THIS DRAWING CONTAINS INFORMATION PROPRIETARY TO FAIRCHILD WESTON SYSTEMS INC. AND MAY NOT BE REPRODUCED WITHOUT WRITTEN PERMISSION FROM FWSI. NEITHER THIS DRAWING NOR ANY REPRODUCTION THEREOF MAY BE USED TO MANUFACTURE ANYTHING SHOWN THEREIN WITHOUT PERMISSION IN WRITING FROM FWSI TO USER SPECIFICALLY REFERRING TO THIS DRAWING

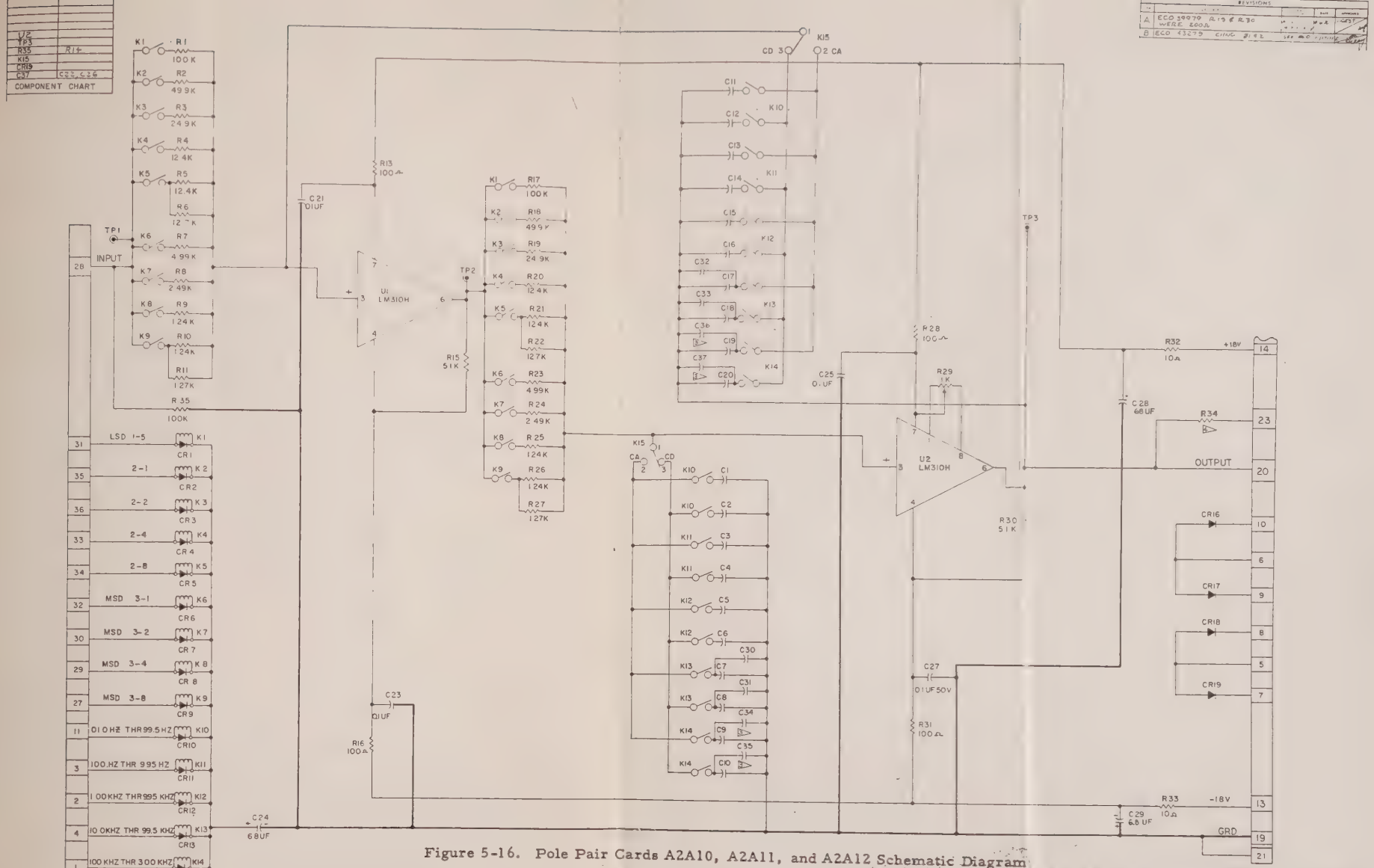

Figure 5-16. Pole Pair Cards A2A10, A2A11, and A2A12 Schematic Diagram

NOTES UNLESS OTHERWISE SPECIFIED
1. ALL DIODES ARE IN4148.
2. ALL RESISTORS ARE RN60C
3. TEST VARIABLE, RANGE 0-50 PF
4. TEST VARIABLE.
5. FOR COMPONENT TOL. / RATING SEE PL-16657.
6. ALL CAPACITOR WITHOUT VALUES SPECIFIED ARE CONFIGUATION VARIABLES OR TEST VARIABLES. SEE APPROPRIATE PART LIST.

BSC 16657-5	4142
BSC 16657-4	4142
BSC 16657-3	4142
BSC 16657-2	4142
BSC 16657-1	4142

PRINTED WIRING SCHEMATIC
"POLE PAIR"

5-30 | 06141 | E | 16655 | B

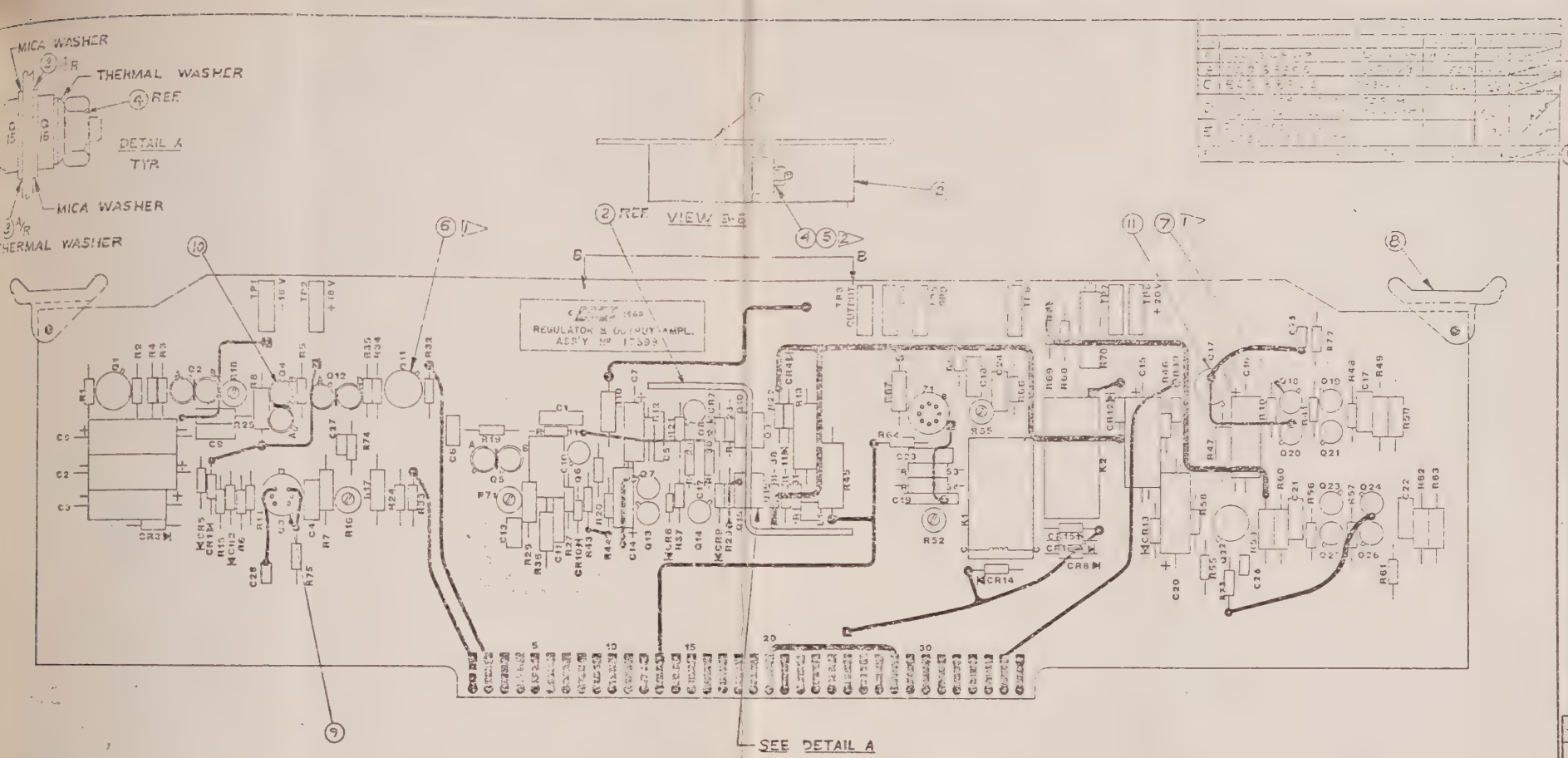

NOTES:

1. TRANSIPAD USED WITH ALL TRASISTORS EXCEPT Q9,Q10,Q15 & Q16
2. MICA & THERMAL WASHER SUPPLIED WITH Q9,Q10,Q15 & Q16. SEE DETAIL "A".

Figure 5-17. Regulator and Output Amplifier Card A2A15 Assembly Diagram

A 205-89-00729 FOR PARTS LIST SEE PL-17399

LIST OF MATERIALS

PRINTED-WIRING ASSEMBLY
REGULATOR & OUTPUT AMPLIFIER

06141 D 17399 F

5-31

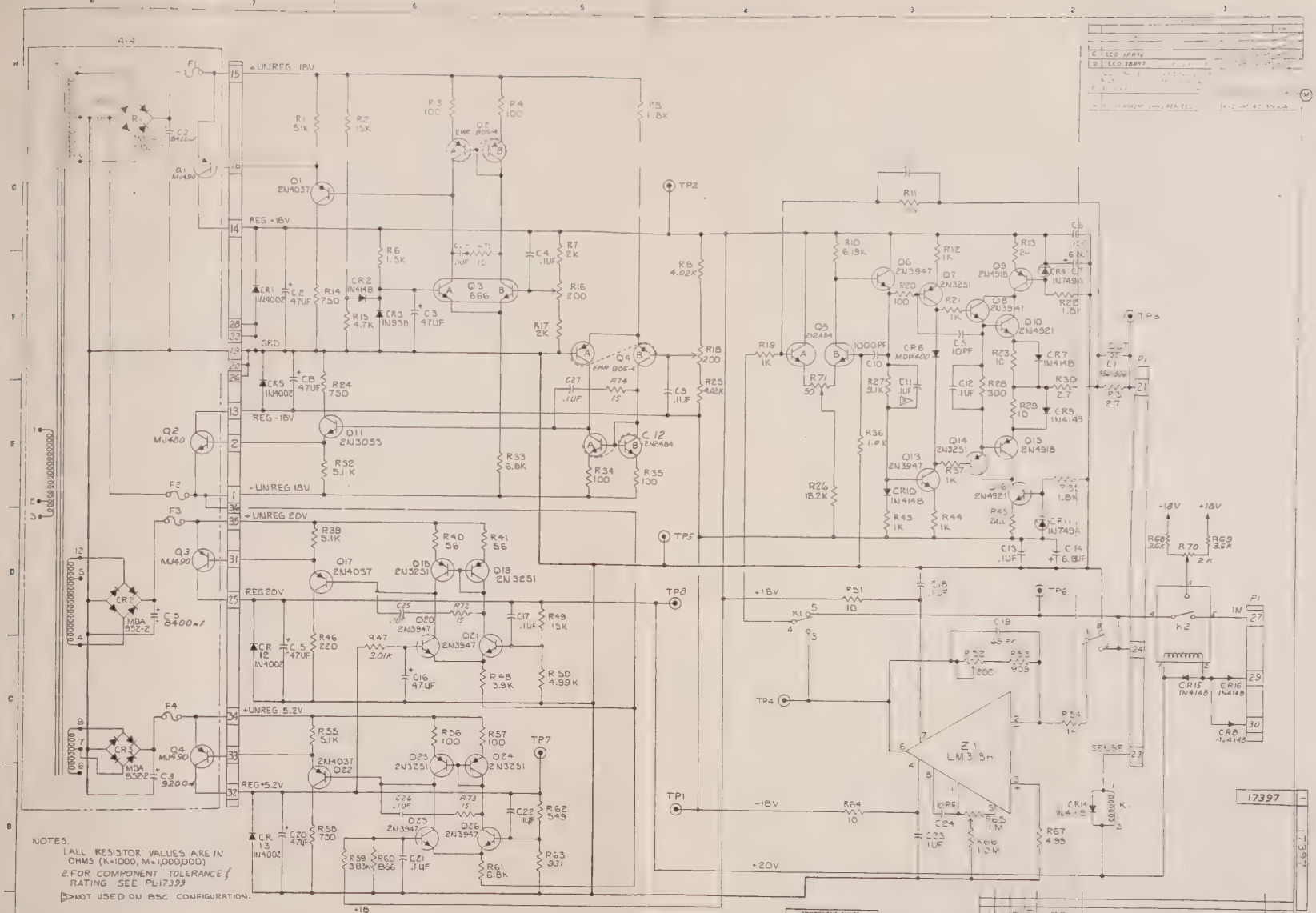

NOTES.
1. ALL RESISTOR VALUES ARE IN OHMS (K=1000, M=1,000,000)
2. FOR COMPONENT TOLERANCE & RATING SEE PL17399
▷ NOT USED ON BSC CONFIGURATION.

Figure 5-18. Regulator and Output Amplifier Card A2A15 Schematic Diagram

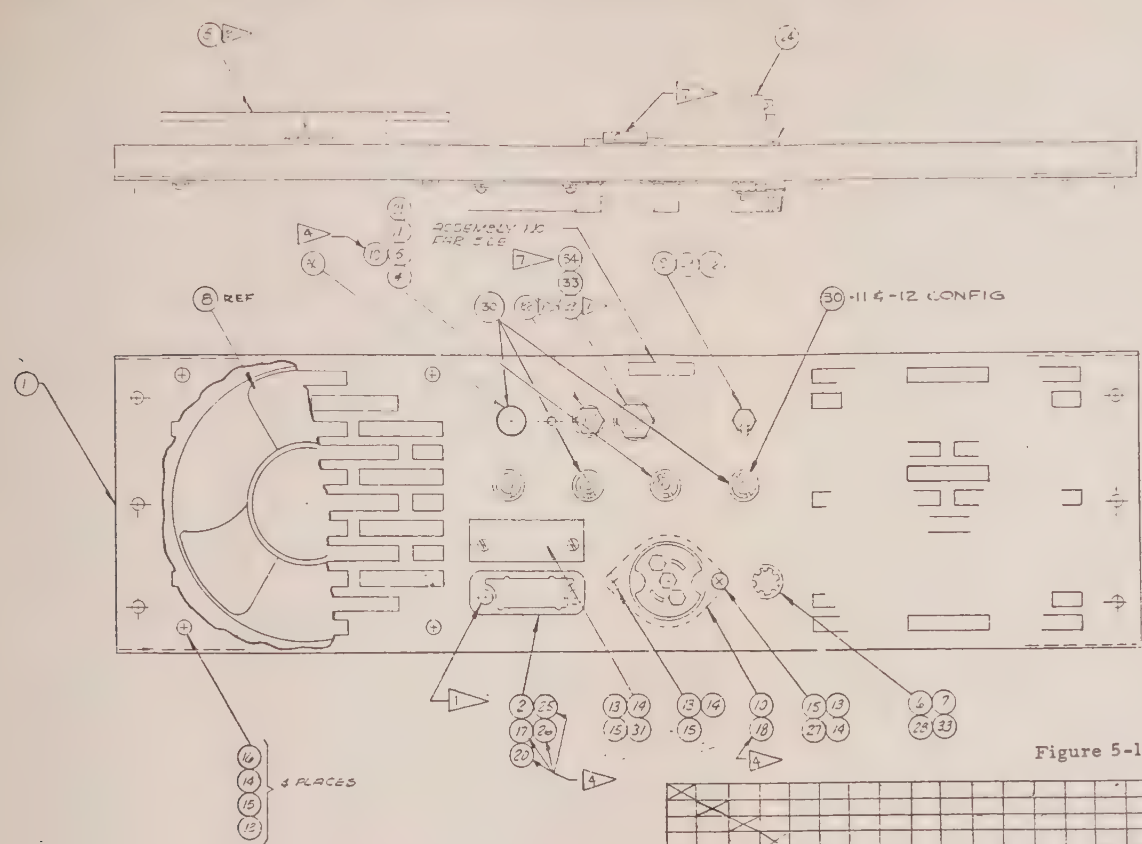

Figure 5-19. Rear Connector Panel A3 Assembly Diagram

SYM	DESCRIPTION		DATE	APPROVED
N	ADDED -?6 CONFIG	N/A		
P	ADDED -8 [illegible]	N/A		
R	REC CHG ADDED -10 CONFIG	N/A		
S	ECO 38303 [illegible]	SEE ECO		
T	REC CHG ADDED -11 CONFIG	N/A		
U	REC CHG ADDED -12 CONFIG ADDED -13 CONFIG	N/A		
V	REC CHG ADDED -14 CONFIG	N/A		
X	ECO 38639 10/13/69			
Y	REC CHG ADDED -15 CONFIG	N/A		
Z	ECO 39054, DELETED ITEM-(?) ADDED ITEM-(?) PICTORIAL CHANGE PER DWG 6244	SEE ECO		
AA	REC CHG ADDED -16 CONFIG	N/A		
AB	ECO 40273 5-7-70 IMPROVE [illegible]		5-7-70	
AC	ECO-62771 REVISED NOTE 4	9-29-80		

NOTE:

1. MTG. HARDWARE SUPPLIED BY VENDOR
2. MOUNT BLOWER WITH AIR FLOW INDICATOR ARROW AS SHOWN.
4. ITEMS 17,18,19,20,25 & 26 FOR BSC, -1 THRU -8 & -13 THRU -16 CONFIGS NOT SHOWN IN FIELD OF DWG. FOR -9, -11 & -12 CONFIGS SEE SHIPPING KITS LISTED ON HIGHER LEVEL ASSY.
5. PICTURE SHOWN IS FOR REF ONLY SEE PL FOR APPROPRIATE COMPONENTS USE [illegible] TO COVER HOLES WHEN COMPONENTS ARE NOT USED.
6. -10 CONFIG IS OBSOLETE FOR NEW DESIGN
7. C1 & ITEM 34 IS USED ON -11 & -12 CONFIGURATIONS ONLY. FOR WIRING, SEE A3 (REAR PANEL) WIRING DIAGRAM.

LIST OF MATERIALS

SARASOTA DIVISION ELECTRO-MECHANICAL RESEARCH INC. • SARASOTA FLORIDA

PANEL ASSEMBLY REAR CONNECTOR PNL

96141 D 6245 AC

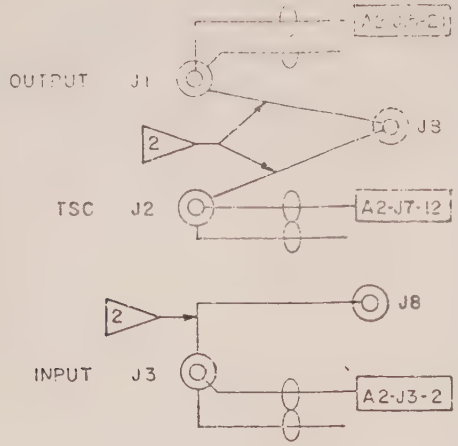

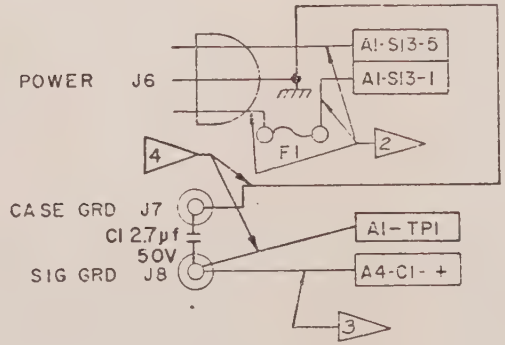

Figure 5-20. Rear Connector Panel A3 Wiring Diagram

18484

NOTES:

1. ALL WIRING TO BE #24 AWG TWISTED PAIR (EMR NO. 276-02-00003)

2 #22 AWG WIRE (EMR NO. 276-98-00081)

3 1/8 INCH BRAID (EMR NO. 232-98-00004) & HEAT SHRINKABLE TUBING (EMR NO. 268-98-00002)

4 #18 AWG WIRE (EMR NO. 276-98-00064)

LIST OF MATERIALS

REQUIRED	PART NO	DESCRIPTION	PART CLASS	MFG CODE	ITEM OR SYMBOL
BSC	6245-11-3142-06				
BSC	6245-11-3142-05				
BSC	6245-11-3142-04				
BSC	6245-11-3142-03				
BSC	6245-11-3142-02				
BSC	6245-11-3142				

SARASOTA DIVISION ©1969
ELECTRO-MECHANICAL RESEARCH, INC. • SARASOTA, FLORIDA

A3 (REAR PANEL) WIRING
MODEL 4142

CAGE UNIT NO	SIZE		REV
06141	C	18484	C

905-13-00053

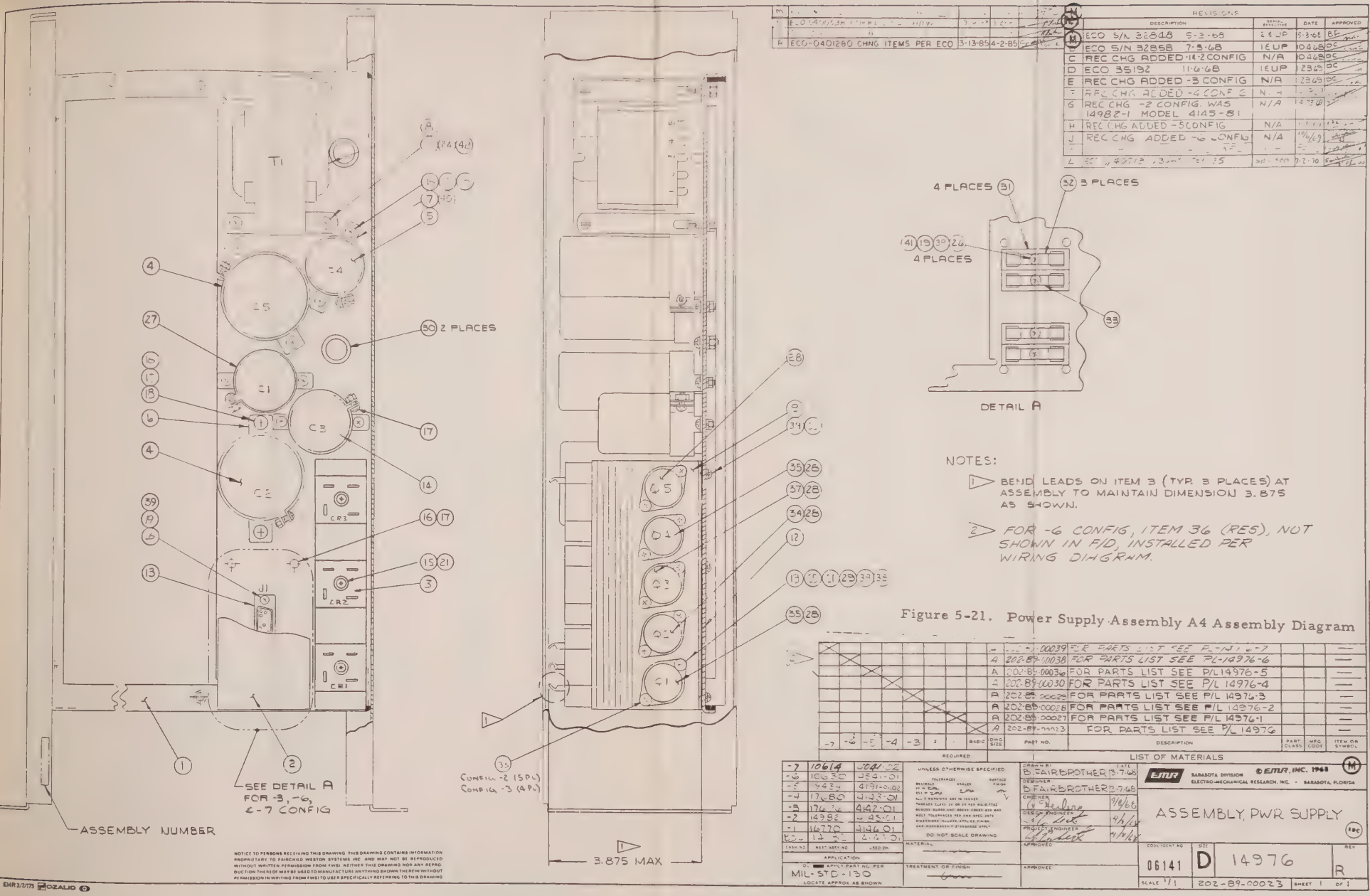

REVISIONS				
	DESCRIPTION	SERIAL EFFECTIVE	DATE	APPROVED
B	ECO S/N 32848 5-3-68	2 & UP	5-3-68	BE
C	ECO S/N 32858 7-9-68	1 & UP	10468	DC
C	REC CHG ADDED -12 CONFIG	N/A	10468	DC
D	ECO 35192 11-6-68	1 & UP	12365	DC
E	REC CHG ADDED -13 CONFIG	N/A	12365	DC
F	REC CHG ADDED -14 CONFIG	N/A		
G	REC CHG -2 CONFIG. WAS 14982-1 MODEL 4145-81	N/A	13732	
H	REC CHG ADDED -5 CONFIG	N/A		
J	REC CHG ADDED -6 CONFIG	N/A	19469	
L	[illegible]	[illegible]	7-2-70	

NOTES:

1. BEND LEADS ON ITEM 3 (TYP. 3 PLACES) AT ASSEMBLY TO MAINTAIN DIMENSION 3.875 AS SHOWN.
2. FOR -6 CONFIG, ITEM 36 (RES), NOT SHOWN IN F/D, INSTALLED PER WIRING DIAGRAM.

Figure 5-21. Power Supply Assembly A4 Assembly Diagram

REQUIRED			PART NO.	DESCRIPTION	PART CLASS	MFG CODE	ITEM OR SYMBOL
			-00039	FOR PARTS LIST SEE P/L 14976-7			
			202-89-00038	FOR PARTS LIST SEE P/L 14976-6			
			202-89-00030	FOR PARTS LIST SEE P/L 14976-5			
			202-89-00029	FOR PARTS LIST SEE P/L 14976-4			
			202-89-00028	FOR PARTS LIST SEE P/L 14976-3			
			202-89-00027	FOR PARTS LIST SEE P/L 14976-2			
			202-89-00026	FOR PARTS LIST SEE P/L 14976-1			
			202-89-00023	FOR PARTS LIST SEE P/L 14976			
-7	-6	-5	-4	-3	2	BASIC	DWG SIZE

LIST OF MATERIALS

-7	10614	JC41-02
-6	10635	JE41-01
-5	9434	41791-0102
-4	17680	JJ43-01
-3	17677	4142-01
-2	14985	JE45-01
-1	16770	4146-01
[illegible]	[illegible]	[illegible]

UNLESS OTHERWISE SPECIFIED
TOLERANCES
DECIMALS ANGLES SURFACE FINISH
DO NOT SCALE DRAWING
MATERIAL
TREATMENT OR FINISH
APPLICATION
APPLY PART NO. PER MIL-STD-130
LOCATE APPROX AS SHOWN

DRAWN BY	D. FAIRBROTHER	3-7-68
DESIGNER	D. FAIRBROTHER	3-7-68
CHECKER	[illegible]	9/6/68
DESIGN ENGINEER	[illegible]	9/6/68
PROJECT ENGINEER	[illegible]	9/11/68
APPROVED		
APPROVED		

EMR SARASOTA DIVISION ELECTRO-MECHANICAL RESEARCH, INC. - SARASOTA, FLORIDA
© EMR, INC. 1968

ASSEMBLY, PWR SUPPLY

CODE IDENT NO	SIZE		REV
06141	D	14976	R
SCALE 1/1	202-89-00023	SHEET 1 OF 1	

11149.76

NOTICE TO PERSONS RECEIVING THIS DRAWING. THIS DRAWING CONTAINS INFORMATION PROPRIETARY TO FAIRCHILD WESTON SYSTEMS INC AND MAY NOT BE REPRODUCED WITHOUT WRITTEN PERMISSION FROM FWS. NEITHER THIS DRAWING NOR ANY REPRODUCTION THEREOF MAY BE USED TO MANUFACTURE ANYTHING SHOWN THEREIN WITHOUT PERMISSION IN WRITING FROM FWS TO USER SPECIFICALLY REFERRING TO THIS DRAWING

EMR 3/2/175 OZALID

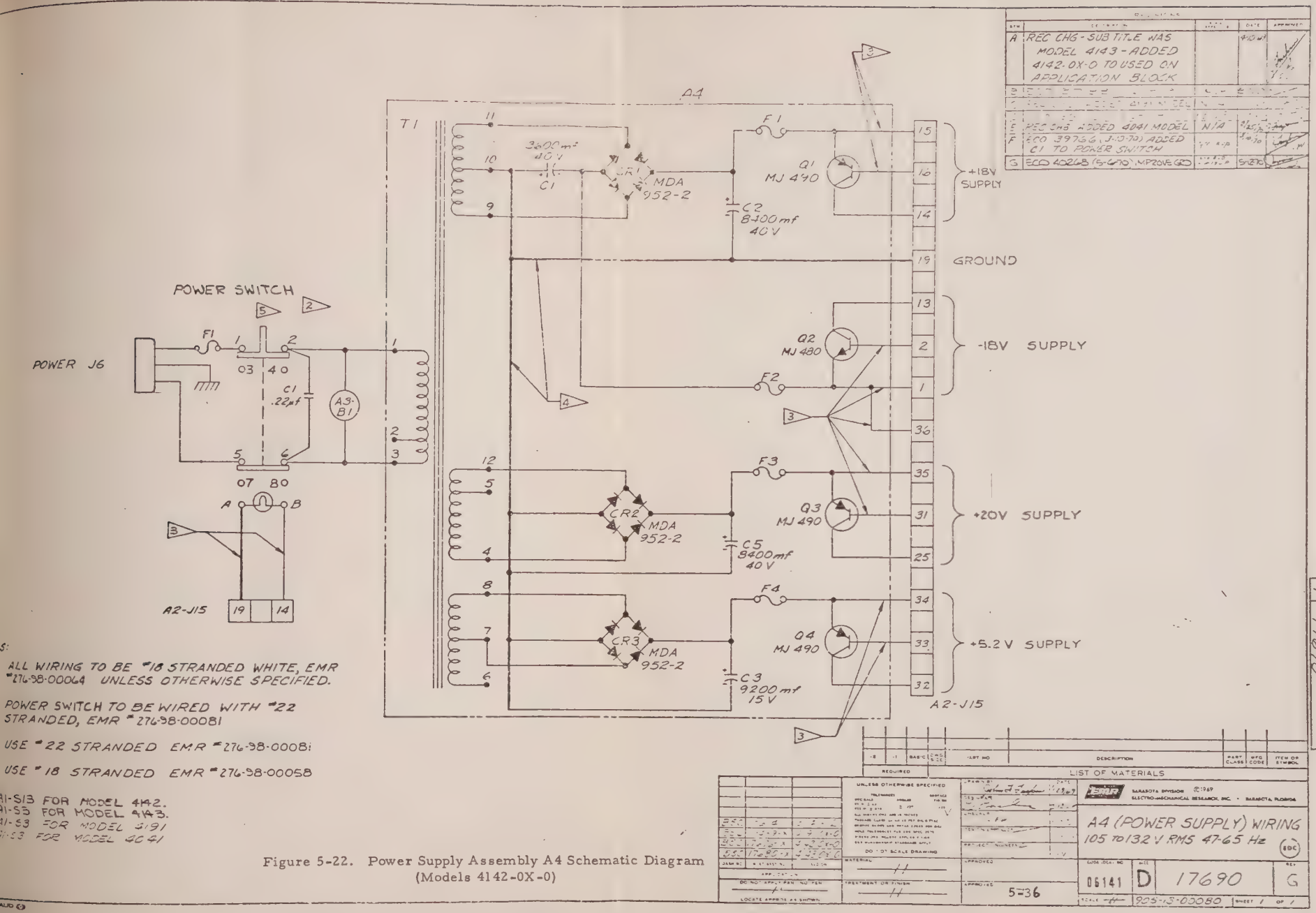

S:

ALL WIRING TO BE #18 STRANDED WHITE, EMR #276-98-00064 UNLESS OTHERWISE SPECIFIED.

POWER SWITCH TO BE WIRED WITH #22 STRANDED, EMR #276-98-00081

USE #22 STRANDED EMR #276-98-00081

USE #18 STRANDED EMR #276-98-00058

A1-S13 FOR MODEL 4142.
A1-S3 FOR MODEL 4143.
A1-S3 FOR MODEL 4191
A1-S3 FOR MODEL 4041

Figure 5-22. Power Supply Assembly A4 Schematic Diagram (Models 4142-0X-0)

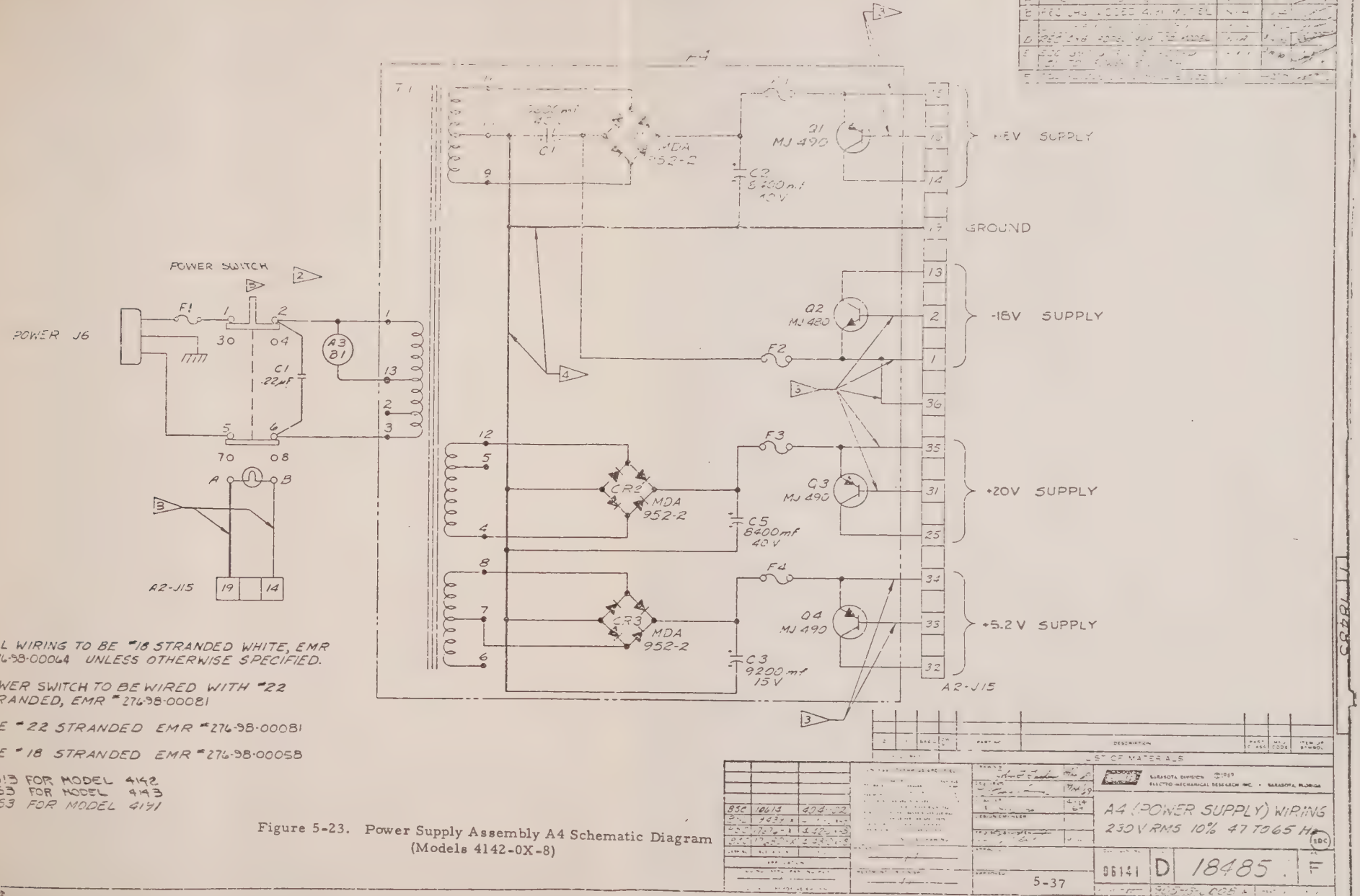

NOTES:

1. ALL WIRING TO BE #18 STRANDED WHITE, EMR #276-98-00064 UNLESS OTHERWISE SPECIFIED.
2. POWER SWITCH TO BE WIRED WITH #22 STRANDED, EMR #276-98-00081
3. USE #22 STRANDED EMR #276-98-00081
4. USE #18 STRANDED EMR #276-98-00058
5. A1-S13 FOR MODEL 4142
   A1-S3 FOR MODEL 4143
   A1-S3 FOR MODEL 4141

Figure 5-23. Power Supply Assembly A4 Schematic Diagram (Models 4142-0X-8)

LIST OF MATERIALS

A4 (POWER SUPPLY) WIRING
230 V RMS 10% 47 TO 65 Hz

06141 D 18485 F

5-37

SECTION 6

PARTS LISTS

6.1 GENERAL

This section contains information concerning parts replacement and parts ordering information for the EMR Model 4142 PBW Tunable Discriminator.

The parts list for each assembly contains a listing of all subassemblies and components of the assembly. These subassemblies and/or components are identified by an item number in the ITEM NO. column. The item numbers (or component designation) correspond to numbers in the reference balloons on the associated EMR drawing. Also included in the parts list for each item is the quantity required (QTY REQ'D), EMR PART NUMBER, EMR DRAWING OR SPEC. NO., item DESCRIPTION, VENDOR NAME, and VENDOR PART NUMBER.

The listings in the VENDOR NAME column are abbreviations for the particular vendors.

Model 4142 Parts List (Cont'd.).

DESCRIPTION	PART NO.	DRAWING NO.
POLE PAIR PRINTED-WIRING ASSEMBLY (Models 4142-01 and -02 only)	205-89-00716	16657-4
POLE PAIR PRINTED-WIRING ASSEMBLY (Models 4142-03 and -04 only)	205-89-00713	16657-1
POLE PAIR PRINTED-WIRING ASSEMBLY (Models 4142-01 and -02 only)	205-89-00712	16657
POLE PAIR PRINTED-WIRING ASSEMBLY (Models 4142-03 and -04 only)	205-89-00714	16657-2
POLE PAIR PRINTED-WIRING ASSEMBLY (Models 4142-05 and -06 only)	205-89-00717	16657-5
REGULATOR AND OUTPUT AMPLIFIER PRINTED-WIRING ASSEMBLY	205-89-00720	17399
REAR CONNECTOR PANEL ASSEMBLY	191-89-00329	6245-11
POWER SUPPLY ASSEMBLY	202-89-00029	14976-3
EXTENDER CARD	905-11-00015	14198

PARTS LIST: 17676 MFR. NAME: FWSI PARENT STK. CONT. NO.: 089-89-00056

DESCRIPTION: DISC,ASSY,TUNABLE PWB 4142-01 UM: EA ECO NO.: RCD CHG ENG. REV.: IA

ITEM NO.	COMPONENT STK. CONT. NO.	DESCRIPTION	QUANTITY	UM	MFR. NAME	MFR. PART/ASSY. NO.
001	202-89-00029	PWR SPLY,ASSY	1	EA	FWSI	14976-3
002	042-89-00125	CHAS,ASSY,CARD	1	EA	FWSI	14980-3
003	191-89-00329	PANEL,ASSY REAR CONNECTOR	1	EA	FWSI	6245-11
004	191-89-00325	PANEL,ASSY,SUB	1	EA	FWSI	17688
005	191-89-00322	PANEL,ASSY,FRONT	1	EA	FWSI	17689
006	075-89-00066	COVER,TOP,ASSY	1	EA	FWSI	20779
007	075-89-00013	COVER,ASSY	1	EA	FWSI	7547-1
009	205-89-00711	PWA,INPUT CARD	1	EA	FWSI	17405
010	205-89-00721	PWA,BPIF SECTION 1	1	EA	FWSI	17390
011	205-89-00722	PWA,BPIF SECTION 2	1	EA	FWSI	17393
013	205-89-00710	PWA,LMTR,DET,SINGLE POLE	1	EA	FWSI	17396
016	205-89-00712	PWA,POLE PAIR	1	EA	FWSI	16657
017	205-89-00720	PWA,RGLTR & OUTPUT AMPL	1	EA	FWSI	17399
018	999-03-00214	KNOB,*POA/VAR*	AR	EA	FWSI	17685
019	111-98-00004	FASTNR, PAWL, LH	1	EA	SOUTHCO	27-N-254-J
020	111-98-00003	FASTNR, PAWL, RH	1	EA	SOUTHCO	27-N-253-J
021	999-03-00215	KNOB,*POA/VAR*	AR	EA	FWSI	17685
022	999-02-00270	SLIDE,PKG,*POA/VAR*	AR	EA	FWSI	17685
023	999-03-00216	LOCKING,KNOB,*POA/VAR*	AR	EA	FWSI	17685
024	999-03-00217	KNOB,*POA/VAR*	AR	EA	FWSI	17685
025	284-99-00004	RET, LOCKING KNOB	2	EA	FWSI	8964
026	239-98-00023	SPACER,3/8DX3/16L,#6	4	EA	AMATOM	9316-SS-140-7
027	258-98-00006	TIE,CABLE 1/16TO5/8IN DIA	500	EA	THB/MML	TY-23M
028	127-99-00001	GROM,NYLON,EDGING	AR	EA	FWSI	3799
032	229-02-00163	SCREW,SET,4-40X1/8	AR	EA	PRCMT OPTION	MS51021-9
033	229-02-00084	SCREW,6-32X5/16 PAN HD	10	EA	PRCMT OPTION	MS51957-27
034	273-02-00006	WASHER,#6, FLT ST STL	6	EA	PRCMT OPTION	MS15795-805
035	273-02-00026	WASHER,#6,INT TOOTH	14	EA	PRCMT OPTION	MS35333-71
036	287-02-00003	NUT,HEX, 6-32	5	EA	PRCMT OPTION	MS35649-264
037	229-02-00099	SCREW,8-32X5/16 PAN HD	6	EA	PRCMT OPTION	MS51957-42
038	273-02-00027	WASHER,#8,INT TOOTH	6	EA	PRCMT OPTION	MS35333-72
039	273-02-00008	WASHER,#8, FLT ST STL	6	EA	PRCMT OPTION	MS15795-807
040	229-98-00033	SCREW,6-32X3/8 RND HD	1	EA	WECKESSER	N-632-3/8 ROUND HEAD
041	273-98-00022	WASHER,FLAT,FIBER,#6SCREW	1	EA	GEN CEMENT	6513
042	268-02-00015	TUBING,105*C,#6,PLASTIC	AR	FT	QVL	MIL-I-631 C/D
043	060-11-00002	CMPD,LOCKING,FINE THREAD	AR	EA	LOCTITE CORP	TYPE 222
044	229-02-00128	SCREW,1/4-20X3/8 PAN HD	3	EA	QVL	MS51957-77
045	273-02-00023	WASHER,1/4,EXT TOOTH	3	EA	PRCMT OPTION	MS35335-61
046	147-89-00707	SHIPPING KIT	1	EA	FWSI	45456
047	027-98-00001	CAP,MALE SHORTING,CONTACT	1	EA	AMPHENOL/QVL	31-017/CW159/U
048	276-98-00081	WIRE,#22,STRD,WHT,600V	29	FT	QPL 22759/11	NAS-703-22-U-C-9

CONTINUED

PARTS LIST: 17676 MFR. NAME: FWSI PARENT STK. CONT. NO.: 089-89-00056

DESCRIPTION: DISC,ASSY,TUNABLE PWB UM: EA ECO NO.: RCD CHG ENG. REV.: IA
4142-01

ITEM NO.	COMPONENT STK. CONT. NO.	DESCRIPTION	QUANTITY	UM	MFR. NAME	MFR. PART/ASSY. NO.
049	276-98-00058	WIRE,#18,STRD,BLK,600V	0.34	FT	QPL 22759/11	NAS-703-18-U-C-0
050	276-98-00064	WIRE,#18,STRD,WHT,600V	3	FT	QPL 22759/11	NAS-703-18-U-C-9
800	127-98-00007	GROM,FASTENER	14	EA	DZUS	GH 3
801	405-98-00004	STUD, FASTENER	14	EA	DZUS	AJ 3-25
C 001	301-23-27003	CAP,CR , 50V 2.7 UF 20%	1	EA	ERIE/MML	8141-050-651-275M
CR001	088-10-41480	DIODE,SW,75V/5UA,4NS/10MA	1	EA	CODI/MML	1N4148
CR002	088-10-41480	DIODE,SW,75V/5UA,4NS/10MA	1	EA	CODI/MML	1N4148
CR003	088-10-41480	DIODE,SW,75V/5UA,4NS/10MA	1	EA	CODI/MML	1N4148
L 001	055-89-00001	L,ASSY	1	EA	FWSI	956-1306
L 002	055-89-00001	L,ASSY	1	EA	FWSI	956-1306
R 001	616-02-10000	RES,1K 5% 1/4W	1	EA	ALLEN BRAD	RC07GF102J
REF001	905-05-00189	VARIABLE CHART	AR	EA	FWSI	17685
REF002	905-13-00081	WIRING, DIAGRAM,CARD TRAY	AR	EA	FWSI	18482
REF003	905-13-00082	WIRING,DIAGRAM,PANEL,SUB	AR	EA	FWSI	18483
REF004	905-13-00083	WIRING,DIAGRAM,PANEL,REAR	AR	EA	FWSI	18484
REF005	999-01-01395	WIRING,DIAGRM,PS*POA/VAR*	AR	EA	FWSI	17685
REF006	905-25-00024	I/O CONN,TABLE	AR	EA	FWSI	18486
REF007	905-07-00162	SPEC,ENG,MODEL 4142	AR	EA	FWSI	18487
REF008	905-28-00002	INSTR,PKG,19-INCH DRAWER	AR	EA	FWSI	14962
REF009	075-89-00013	COVER,ASSY	AR	EA	FWSI	7547-1
REF010	075-89-00066	COVER,TOP,ASSY	AR	EA	FWSI	20779

END OF LIST

PARTS LIST: 17676-1 MFR. NAME: FWSI PARENT STK. CONT. NO.: 089-89-00057

DESCRIPTION: DISCR,ASSY,TUNABLE PWB 4142-02 UM: EA ECO NO.: RCD CHG ENG. REV.: JA

ITEM NO.	COMPONENT STK. CONT. NO.	DESCRIPTION	QUANTITY	UM	MFR. NAME	MFR. PART/ASSY. NO.
001	202-89-00029	PWR SPLY,ASSY	1	EA	FWSI	14976-3
002	042-89-00125	CHAS,ASSY,CARD	1	EA	FWSI	14980-3
003	191-89-00329	PANEL,ASSY REAR CONNECTOR	1	EA	FWSI	6245-11
004	191-89-00325	PANEL,ASSY,SUB	1	EA	FWSI	17688
005	191-89-00322	PANEL,ASSY,FRONT	1	EA	FWSI	17689
006	075-89-00066	COVER,TOP,ASSY	1	EA	FWSI	20779
007	075-89-00013	COVER,ASSY	1	EA	FWSI	7547-1
009	205-89-00711	PWA,INPUT CARD	1	EA	FWSI	17405
010	205-89-00721	PWA,BPIF SECTION 1	1	EA	FWSI	17390
011	205-89-00722	PWA,BPIF SECTION 2	1	EA	FWSI	17393
012	205-89-00723	PWA,TAPE SPEED COMPEN	1	EA	FWSI	17402
013	205-89-00710	PWA,LMTR,DET,SINGLE POLE	1	EA	FWSI	17396
016	205-89-00712	PWA,POLE PAIR	1	EA	FWSI	16657
017	205-89-00720	PWA,RGLTR & OUTPUT AMPL	1	EA	FWSI	17399
018	999-03-00214	KNOB,*POA/VAR*	AR	EA	FWSI	17685
019	111-98-00004	FASTNR, PAWL, LH	1	EA	SOUTHCO	27-N-254-J
020	111-98-00003	FASTNR, PAWL, RH	1	EA	SOUTHCO	27-N-253-J
021	999-03-00215	KNOB,*POA/VAR*	AR	EA	FWSI	17685
022	999-02-00270	SLIDE,PKG,*POA/VAR*	AR	EA	FWSI	17685
023	999-03-00216	LOCKING,KNOB,*POA/VAR*	AR	EA	FWSI	17685
024	999-03-00217	KNOB,*POA/VAR*	AR	EA	FWSI	17685
025	284-99-00004	RET, LOCKING KNOB	2	EA	FWSI	8964
026	239-98-00023	SPACER,3/8DX3/16L,#6	4	EA	AMATOM	9316-SS-140-7
027	258-98-00006	TIE,CABLE 1/16TO5/8IN DIA	500	EA	THB/MML	TY-23M
028	127-99-00001	GROM,NYLON,EDGING	AR	EA	FWSI	3799
032	229-02-00163	SCREW,SET,4-40X1/8	AR	EA	PRCMT OPTION	MS51021-9
033	229-02-00084	SCREW,6-32X5/16 PAN HD	10	EA	PRCMT OPTION	MS51957-27
034	273-02-00006	WASHER,#6, FLT ST STL	6	EA	PRCMT OPTION	MS15795-805
035	273-02-00026	WASHER,#6,INT TOOTH	14	EA	PRCMT OPTION	MS35333-71
036	287-02-00003	NUT,HEX, 6-32	5	EA	PRCMT OPTION	MS35649-264
037	229-02-00099	SCREW,8-32X5/16 PAN HD	6	EA	PRCMT OPTION	MS51957-42
038	273-02-00027	WASHER,#8,INT TOOTH	6	EA	PRCMT OPTION	MS35333-72
039	273-02-00008	WASHER,#8, FLT ST STL	6	EA	PRCMT OPTION	MS15795-807
040	229-98-00033	SCREW,6-32X3/8 RND HD	1	EA	WECKESSER	N-632-3/8 ROUND HEAD
041	273-98-00022	WASHER,FLAT,FIBER,#6SCREW	1	EA	GEN CEMENT	6513
042	268-02-00015	TUBING,105*C,#6,PLASTIC	AR	FT	QVL	MIL-I-631 C/D
043	060-11-00002	CMPD,LOCKING,FINE THREAD	AR	EA	LOCTITE CORP	TYPE 222
044	229-02-00128	SCREW,1/4-20X3/8 PAN HD	3	EA	QVL	MS51957-77
045	273-02-00023	WASHER,1/4,EXT TOOTH	3	EA	PRCMT OPTION	MS35335-61
046	147-89-00707	SHIPPING KIT	1	EA	FWSI	45456
047	027-98-00001	CAP,MALE SHORTING,CONTACT	1	EA	AMPHENOL/QVL	31-017/CW159/U

CONTINUED

PARTS LIST: 17676-1 MFR. NAME: FWSI PARENT STK. CONT. NO.: 089-89-00057

DESCRIPTION: DISCR,ASSY,TUNABLE PWB 4142-02 UM: EA ECO NO.: RCD CHG ENG. REV.: JA

ITEM NO.	COMPONENT STK. CONT. NO.	DESCRIPTION	QUANTITY	UM	MFR. NAME	MFR. PART/ASSY. NO.
048	276-98-00081	WIRE,#22,STRD,WHT,600V	29	FT	QPL 22759/11	NAS-703-22-U-C-9
049	276-98-00058	WIRE,#18,STRD,BLK,600V	0.34	FT	QPL 22759/11	NAS-703-18-U-C-0
050	276-98-00064	WIRE,#18,STRD,WHT,600V	3	FT	QPL 22759/11	NAS-703-18-U-C-9
800	127-98-00007	GROM,FASTENER	14	EA	DZUS	GH 3
801	405-98-00004	STUD, FASTENER	14	EA	DZUS	AJ 3-25
C 001	301-23-27003	CAP,CR , 50V 2.7 UF 20%	1	EA	ERIE/MML	8141-050-651-275M
CR001	088-10-41480	DIODE,SW,75V/5UA,4NS/10MA	1	EA	CODI/MML	1N4148
CR002	088-10-41480	DIODE,SW,75V/5UA,4NS/10MA	1	EA	CODI/MML	1N4148
CR003	088-10-41480	DIODE,SW,75V/5UA,4NS/10MA	1	EA	CODI/MML	1N4148
L 001	055-89-00001	L,ASSY	1	EA	FWSI	956-1306
L 002	055-89-00001	L,ASSY	1	EA	FWSI	956-1306
R 001	616-02-10000	RES,1K 5% 1/4W	1	EA	ALLEN BRAD	RC07GF102J
REF001	905-05-00189	VARIABLE CHART	AR	EA	FWSI	17685
REF002	905-13-00105	WIRING DIAG, CARD FILE	AR	EA	FWSI	16786
REF003	905-13-00082	WIRING,DIAGRAM,PANEL,SUB	AR	EA	FWSI	18483
REF004	905-13-00083	WIRING,DIAGRAM,PANEL,REAR	AR	EA	FWSI	18484
REF005	999-01-01395	WIRING,DIAGRM,PS*POA/VAR*	AR	EA	FWSI	17685
REF006	905-25-00024	I/O CONN,TABLE	AR	EA	FWSI	18486
REF007	905-07-00162	SPEC,ENG,MODEL 4142	AR	EA	FWSI	18487
REF008	905-28-00002	INSTR,PKG,19-INCH DRAWER	AR	EA	FWSI	14962
REF009	075-89-00013	COVER,ASSY	AR	EA	FWSI	7547-1
REF010	075-89-00066	COVER,TOP,ASSY	AR	EA	FWSI	20779

END OF LIST

PARTS LIST: 17676-2 MFR. NAME: FWSI PARENT STK. CONT. NO.: 089-89-00058

DESCRIPTION: DISCR,ASSY,TUNABLE PWB UM: EA ECO NO.: RCD CHG ENG. REV.: JA
4142-03

ITEM NO.	COMPONENT STK. CONT. NO.	DESCRIPTION	QUANTITY	UM	MFR. NAME	MFR. PART/ASSY. NO.
001	202-89-00029	PWR SPLY,ASSY	1	EA	FWSI	14976-3
002	042-89-00125	CHAS,ASSY,CARD	1	EA	FWSI	14980-3
003	191-89-00329	PANEL,ASSY REAR CONNECTOR	1	EA	FWSI	6245-11
004	191-89-00325	PANEL,ASSY,SUB	1	EA	FWSI	17688
005	191-89-00322	PANEL,ASSY,FRONT	1	EA	FWSI	17689
006	075-89-00066	COVER,TOP,ASSY	1	EA	FWSI	20779
007	075-89-00013	COVER,ASSY	1	EA	FWSI	7547-1
009	205-89-00711	PWA,INPUT CARD	1	EA	FWSI	17405
010	205-89-00721	PWA,BPIF SECTION 1	1	EA	FWSI	17390
011	205-89-00722	PWA,BPIF SECTION 2	1	EA	FWSI	17393
013	205-89-00718	PWA,LMTR,DET,SINGLE POLE	1	EA	FWSI	17396-1
015	205-89-00713	PWA,POLE PAIR	1	EA	FWSI	16657-1
016	205-89-00714	PWA,POLE PAIR	1	EA	FWSI	16657-2
017	205-89-00720	PWA,RGLTR & OUTPUT AMPL	1	EA	FWSI	17399
018	999-03-00214	KNOB,*POA/VAR*	AR	EA	FWSI	17685
019	111-98-00004	FASTNR, PAWL, LH	1	EA	SOUTHCO	27-N-254-J
020	111-98-00003	FASTNR, PAWL, RH	1	EA	SOUTHCO	27-N-253-J
021	999-03-00215	KNOB,*POA/VAR*	AR	EA	FWSI	17685
022	999-02-00270	SLIDE,PKG,*POA/VAR*	AR	EA	FWSI	17685
023	999-03-00216	LOCKING,KNOB,*POA/VAR*	AR	EA	FWSI	17685
024	999-03-00217	KNOB,*POA/VAR*	AR	EA	FWSI	17685
025	284-99-00004	RET, LOCKING KNOB	2	EA	FWSI	8964
026	239-98-00023	SPACER,3/8DX3/16L,#6	4	EA	AMATOM	9316-SS-140-7
027	258-98-00006	TIE,CABLE 1/16TO5/8IN DIA	500	EA	THB/MML	TY-23M
028	127-99-00001	GROM,NYLON,EDGING	AR	EA	FWSI	3799
032	229-02-00163	SCREW,SET,4-40X1/8	AR	EA	PRCMT OPTION	MS51021-9
033	229-02-00084	SCREW,6-32X5/16 PAN HD	10	EA	PRCMT OPTION	MS51957-27
034	273-02-00006	WASHER,#6, FLT ST STL	6	EA	PRCMT OPTION	MS15795-805
035	273-02-00026	WASHER,#6,INT TOOTH	14	EA	PRCMT OPTION	MS35333-71
036	287-02-00003	NUT,HEX, 6-32	5	EA	PRCMT OPTION	MS35649-264
037	229-02-00099	SCREW,8-32X5/16 PAN HD	6	EA	PRCMT OPTION	MS51957-42
038	273-02-00027	WASHER,#8,INT TOOTH	6	EA	PRCMT OPTION	MS35333-72
039	273-02-00008	WASHER,#8, FLT ST STL	6	EA	PRCMT OPTION	MS15795-807
040	229-98-00033	SCREW,6-32X3/8 RND HD	1	EA	WECKESSER	N-632-3/8 ROUND HEAD
041	273-98-00022	WASHER,FLAT,FIBER,#6SCREW	1	EA	GEN CEMENT	6513
042	268-02-00015	TUBING,105*C,#6,PLASTIC	AR	FT	QVL	MIL-I-631 C/D
043	060-11-00002	CMPD,LOCKING,FINE THREAD	AR	EA	LOCTITE CORP	TYPE 222
044	229-02-00128	SCREW,1/4-20X3/8 PAN HD	3	EA	QVL	MS51957-77
045	273-02-00023	WASHER,1/4,EXT TOOTH	3	EA	PRCMT OPTION	MS35335-61
046	147-89-00707	SHIPPING KIT	1	EA	FWSI	45456
047	027-98-00001	CAP,MALE SHORTING,CONTACT	1	EA	AMPHENOL/QVL	31-017/CW159/U

CONTINUED

PARTS LIST: 17676-2 MFR. NAME: FWSI PARENT STK. CONT. NO.: 089-89-00058

DESCRIPTION: DISCR,ASSY,TUNABLE PWB 4142-03 UM: EA ECO NO.: RCD CHG ENG. REV.: JA

ITEM NO.	COMPONENT STK. CONT. NO.	DESCRIPTION	QUANTITY	UM	MFR. NAME	MFR. PART/ASSY. NO.
048	276-98-00081	WIRE,#22,STRD,WHT,600V	29	FT	QPL 22759/11	NAS-703-22-U-C-9
049	276-98-00058	WIRE,#18,STRD,BLK,600V	0.34	FT	QPL 22759/11	NAS-703-18-U-C-0
050	276-98-00064	WIRE,#18,STRD,WHT,600V	3	FT	QPL 22759/11	NAS-703-18-U-C-9
800	127-98-00007	GROM,FASTENER	14	EA	DZUS	GH 3
801	405-98-00004	STUD, FASTENER	14	EA	DZUS	AJ 3-25
C 001	301-23-27003	CAP,CR , 50V 2.7 UF 20%	1	EA	ERIE/MML	8141-050-651-275M
CR001	088-10-41480	DIODE,SW,75V/5UA,4NS/10MA	1	EA	CODI/MML	1N4148
CR002	088-10-41480	DIODE,SW,75V/5UA,4NS/10MA	1	EA	CODI/MML	1N4148
CR003	088-10-41480	DIODE,SW,75V/5UA,4NS/10MA	1	EA	CODI/MML	1N4148
L 001	055-89-00001	L,ASSY	1	EA	FWSI	956-1306
L 002	055-89-00001	L,ASSY	1	EA	FWSI	956-1306
R 001	616-02-10000	RES,1K 5% 1/4W	1	EA	ALLEN BRAD	RC07GF102J
REF001	905-05-00189	VARIABLE CHART	AR	EA	FWSI	17685
REF002	905-13-00104	WIRING DIAG, CARD FILE	AR	EA	FWSI	16787
REF003	905-13-00082	WIRING,DIAGRAM,PANEL,SUB	AR	EA	FWSI	18483
REF004	905-13-00083	WIRING,DIAGRAM,PANEL,REAR	AR	EA	FWSI	18484
REF005	999-01-01395	WIRING,DIAGRM,PS*POA/VAR*	AR	EA	FWSI	17685
REF006	905-25-00024	I/O CONN,TABLE	AR	EA	FWSI	18486
REF007	905-07-00162	SPEC,ENG,MODEL 4142	AR	EA	FWSI	18487
REF008	905-28-00002	INSTR,PKG,19-INCH DRAWER	AR	EA	FWSI	14962
REF009	075-89-00013	COVER,ASSY	AR	EA	FWSI	7547-1
REF010	075-89-00066	COVER,TOP,ASSY	AR	EA	FWSI	20779

END OF LIST

PARTS LIST: 17676-3 MFR. NAME: FWSI PARENT STK. CONT. NO.: 089-89-00059

DESCRIPTION: DSCRM,ASSY,TUNABLE PBW UM: EA ECO NO.: RC00001 ENG. REV.: J#
4142-04

ITEM NO.	COMPONENT STK. CONT. NO.	DESCRIPTION	QUANTITY	UM	MFR. NAME	MFR. PART/ASSY. NO.
001	202-89-00029	PWR SPLY,ASSY	1	EA	FWSI	14976-3
002	042-89-00125	CHAS,ASSY,CARD	1	EA	FWSI	14980-3
003	191-89-00329	PANEL,ASSY REAR CONNECTOR	1	EA	FWSI	6245-11
004	191-89-00325	PANEL,ASSY,SUB	1	EA	FWSI	17688
005	191-89-00322	PANEL,ASSY,FRONT	1	EA	FWSI	17689
006	075-89-00066	COVER,TOP,ASSY	1	EA	FWSI	20779
007	075-89-00013	COVER,ASSY	1	EA	FWSI	7547-1
009	205-89-00711	PWA,INPUT CARD	1	EA	FWSI	17405
010	205-89-00721	PWA,BPIF SECTION 1	1	EA	FWSI	17390
011	205-89-00722	PWA,BPIF SECTION 2	1	EA	FWSI	17393
012	205-89-00723	PWA,TAPE SPEED COMPEN	1	EA	FWSI	17402
013	205-89-00718	PWA,LMTR,DET,SINGLE POLE	1	EA	FWSI	17396-1
015	205-89-00713	PWA,POLE PAIR	1	EA	FWSI	16657-1
016	205-89-00714	PWA,POLE PAIR	1	EA	FWSI	16657-2
017	205-89-00720	PWA,RGLTR & OUTPUT AMPL	1	EA	FWSI	17399
018	999-03-00214	KNOB,*POA/VAR*	AR	EA	FWSI	17685
019	111-98-00004	FASTNR, PAWL, LH	1	EA	SOUTHCO	27-N-254-J
020	111-98-00003	FASTNR, PAWL, RH	1	EA	SOUTHCO	27-N-253-J
021	999-03-00215	KNOB,*POA/VAR*	AR	EA	FWSI	17685
022	999-02-00270	SLIDE,PKG,*POA/VAR*	AR	EA	FWSI	17685
023	999-03-00216	LOCKING,KNOB,*POA/VAR*	AR	EA	FWSI	17685
024	999-03-00217	KNOB,*POA/VAR*	AR	EA	FWSI	17685
025	284-99-00004	RET, LOCKING KNOB	2	EA	FWSI	8964
026	239-98-00023	SPACER,3/8DX3/16L,#6	4	EA	AMATOM	9316-SS-140-7
027	258-98-00006	TIE,CABLE 1/16TO5/8IN DIA	500	EA	THB/MML	TY-23M
028	127-98-00020	GROM,RUBBER EDGING	1	FT	ATL INDIA	X-5284
033	229-02-00084	SCREW,6-32X5/16 PAN HD	10	EA	PRCMT OPTION	MS51957-27
034	273-02-00006	WASHER,#6, FLT ST STL	6	EA	PRCMT OPTION	MS15795-805
035	273-02-00026	WASHER,#6,INT TOOTH	14	EA	PRCMT OPTION	MS35333-71
036	287-02-00003	NUT,HEX, 6-32	5	EA	PRCMT OPTION	MS35649-264
037	229-02-00099	SCREW,8-32X5/16 PAN HD	6	EA	PRCMT OPTION	MS51957-42
038	273-02-00027	WASHER,#8,INT TOOTH	6	EA	PRCMT OPTION	MS35333-72
039	273-02-00008	WASHER,#8, FLT ST STL	6	EA	PRCMT OPTION	MS15795-807
040	229-98-00033	SCREW,6-32X3/8 RND HD	1	EA	WECKESSER	N-632-3/8 ROUND HEAD
041	273-98-00040	WASHER,#6,FIBRE .141 ID X	2	EA	H H SMITH	2162
042	268-02-00085	TUBING,# 8, EXTR TEF BLK	0.17	FT	PRCMT OPTION	MIL-I-22129
043	060-11-00002	CMPD,LOCKING,FINE THREAD	AR	EA	LOCTITE CORP	TYPE 222
044	229-02-00128	SCREW,1/4-20X3/8 PAN HD	3	EA	QVL	MS51957-77
045	273-02-00023	WASHER,1/4,EXT TOOTH	3	EA	PRCMT OPTION	MS35335-61
046	147-89-00706	SHIPPING KIT	1	EA	FWSI	45455
047	027-98-00001	CAP,MALE SHORTING,CONTACT	1	EA	AMPHENOL/QVL	31-017/CW159/U

CONTINUED

PARTS LIST: 17676-3 MFR. NAME: FWSI PARENT STK. CONT. NO.: 089-89-00059

DESCRIPTION: DSCRM,ASSY,TUNABLE PBW UM: EA ECO NO.: RC00001 ENG. REV.: J#
4142-04

ITEM NO.	COMPONENT STK. CONT. NO.	DESCRIPTION	QUANTITY	UM	MFR. NAME	MFR. PART/ASSY. NO.
048	276-98-00081	WIRE,#22,STRD,WHT,600V	29	FT	QPL 22759/11	NAS-703-22-U-C-9
049	276-98-00058	WIRE,#18,STRD,BLK,600V	0.34	FT	QPL 22759/11	NAS-703-18-U-C-0
050	276-98-00064	WIRE,#18,STRD,WHT,600V	3	FT	QPL 22759/11	NAS-703-18-U-C-9
051	273-02-00030	WASHER,5/16,INT TOOTH	2	EA	PRCMT OPTION	MS35333-75
052	276-98-00102	WIRE,#24,STRD,WHT,600V	189.7	FT	QPL 22759/11	NAS-703-24-U-C-9
053	276-02-00029	WIRE,#20,SOL, WHT, 600V	1	FT	PRCMT OPTION	MIL-W-16878/4*SIL CTD*
054	276-98-00096	WIRE,#24,STRD,ORN,600V	136	FT	QPL 22759/11	NAS-703-24-U-C-3
055	276-98-00048	WIRE,#12,STRD,BLK,600V	12	FT	QPL 22759/11	NAS-703-12-U-C-0
056	276-98-00095	WIRE,#24,STRD,RED,600V	104	FT	QPL 22759/11	NAS-703-24-U-C-2
057	276-98-00069	WIRE,#20,STRD,GRY,600V	10	FT	QPL 22759/11	NAS-703-20-U-C-8
058	276-98-00070	WIRE,#20,STRD,WHT,600V	29.17	FT	QPL 22759/11	NAS-703-20-U-C-9
059	276-02-00016	WIRE,#24,STRD,TW PR,600V	0.21	FT	PRCMT OPTION	MIL-W-16878/4*SIL CTD*
060	232-98-00001	SHIELD,3/64 IN BRAIDED	5	FT	ALPHA,BELDEN	#1223,#8674
061	232-98-00004	SHIELD,1/8 IN FLAT BRAID	4.25	FT	ALPHA	1229
062	268-02-00020	TUBING,#10,EXTR TEF,CLEAR	4	FT	PRCMT OPTION	MIL-I-22129
063	276-98-00066	WIRE,#20,STRD,BLK,600V	5	FT	QPL 22759	NAS-703-20-U-C-0
064	276-99-00007	WIRE,#20,BUSS,SOLID	10	FT	FWSI	619-20
065	276-99-00006	WIRE,#18,BUSS,SOLID	1	FT	FWSI	619-18
066	276-99-00009	WIRE,#24,BUSS,SOLID	1	FT	FWSI	619-24
067	268-02-00024	TUBING,#16,EXTR TEF,CLEAR	3	FT	PRCMT OPTION	MIL-I-22129
068	268-02-00039	TUBING,#22,EXTR TEF,CLEAR	1	FT	PRCMT OPTION	MIL-I-22129
069	268-02-00028	TUBING,#20,EXTR TEF,CLR	1	FT	PRCMT OPTION	MIL-I-22129
070	268-02-00049	TUBING,#24,EXTR TEF,CLEAR	1	FT	PRCMT OPTION	MIL-I-22129
071	268-98-00008	TBG, 3/64,THERMO-FIT,BLU	0.17	FT	RACHEM/MML	RNF-100-3/64-BLU
072	268-98-00004	TBG, 3/32,THERMO-FIT,WHT	0.42	FT	RACHEM/MML	RNF-100-3/32-WHT
073	268-98-00002	TBG, 3/16,THERMO-FIT,WHT	0.5	FT	RACHEM/MML	RNF-100-3/16-WHT
074	268-98-00026	TBG, 3/4 ,THERMO-FIT,WHT	0.17	FT	RACHEM/MML	RNF-100-3/4-WHT
800	127-98-00007	GROM,FASTENER	14	EA	DZUS	GH 3
800	405-98-00004	STUD, FASTENER	14	EA	DZUS	AJ 3-25
C 001	301-23-27003	CAP,CR , 50V 2.7 UF 20%	1	EA	ERIE/MML	8141-050-651-275M
CR001	088-10-41480	DIODE,SW,75V/5UA,4NS/10MA	1	EA	CODI/MML	1N4148
CR002	088-10-41480	DIODE,SW,75V/5UA,4NS/10MA	1	EA	CODI/MML	1N4148
CR003	088-10-41480	DIODE,SW,75V/5UA,4NS/10MA	1	EA	CODI/MML	1N4148
L 001	055-89-00001	L,ASSY	1	EA	FWSI	956-1306
L 002	055-89-00001	L,ASSY	1	EA	FWSI	956-1306
R 001	616-02-10000	RES,1K 5% 1/4W	1	EA	ALLEN BRAD	RC07GF102J
REF001	905-05-00189	VARIABLE CHART	AR	EA	FWSI	17685
REF002	905-13-00103	WIRING DIAG,CARD FILE	AR	EA	FWSI	17683
REF003	905-13-00082	WIRING,DIAGRAM,PANEL,SUB	AR	EA	FWSI	18483
REF004	905-13-00083	WIRING,DIAGRAM,PANEL,REAR	AR	EA	FWSI	18484
REF005	999-01-01395	WIRING,DIAGRM,PS*POA/VAR*	AR	EA	FWSI	17685

CONTINUED

PARTS LIST: 17676-3 MFR. NAME: FWSI PARENT STK. CONT. NO.: 089-89-00059

DESCRIPTION: DSCRM,ASSY,TUNABLE PBW 4142-04 UM: EA ECO NO.: RC00001 ENG. REV.: J#

ITEM NO.	COMPONENT STK. CONT. NO.	DESCRIPTION	QUANTITY	UM	MFR. NAME	MFR. PART/ASSY. NO.
REF006	905-25-00024	I/O CONN,TABLE	AR	EA	FWSI	18486
REF007	905-07-00162	SPEC,ENG,MODEL 4142	AR	EA	FWSI	18487
REF008	905-28-00002	INSTR,PKG,19-INCH DRAWER	AR	EA	FWSI	14962
REF009	075-89-00013	COVER,ASSY	AR	EA	FWSI	7547-1
REF010	075-89-00066	COVER,TOP,ASSY	AR	EA	FWSI	20779

END OF LIST

PARTS LIST: 17676-4 MFR. NAME: FWSI PARENT STK. CONT. NO.: 089-89-00060

DESCRIPTION: DISCR,ASSY,TUNABLE PWB 4142-05 UM: EA ECO NO.: RCD CHG ENG. REV.: IA

ITEM NO.	COMPONENT STK. CONT. NO.	DESCRIPTION	QUANTITY	UM	MFR. NAME	MFR. PART/ASSY. NO.
001	202-89-00029	PWR SPLY,ASSY	1	EA	FWSI	14976-3
002	042-89-00125	CHAS,ASSY,CARD	1	EA	FWSI	14980-3
003	191-89-00329	PANEL,ASSY REAR CONNECTOR	1	EA	FWSI	6245-11
004	191-89-00325	PANEL,ASSY,SUB	1	EA	FWSI	17688
005	191-89-00322	PANEL,ASSY,FRONT	1	EA	FWSI	17689
006	075-89-00066	COVER,TOP,ASSY	1	EA	FWSI	20779
007	075-89-00013	COVER,ASSY	1	EA	FWSI	7547-1
009	205-89-00711	PWA,INPUT CARD	1	EA	FWSI	17405
010	205-89-00721	PWA,BPIF SECTION 1	1	EA	FWSI	17390
011	205-89-00722	PWA,BPIF SECTION 2	1	EA	FWSI	17393
013	205-89-00719	PWA,LMTR,DET,SINGLE POLE	1	EA	FWSI	17396-2
014	205-89-00715	PWA,POLE PAIR	1	EA	FWSI	16657-3
015	205-89-00716	PWA,POLE PAIR	1	EA	FWSI	16657-4
016	205-89-00717	PWA,POLE PAIR	1	EA	FWSI	16657-5
017	205-89-00720	PWA,RGLTR & OUTPUT AMPL	1	EA	FWSI	17399
018	999-03-00214	KNOB,*POA/VAR*	AR	EA	FWSI	17685
019	111-98-00004	FASTNR, PAWL, LH	1	EA	SOUTHCO	27-N-254-J
020	111-98-00003	FASTNR, PAWL, RH	1	EA	SOUTHCO	27-N-253-J
021	999-03-00215	KNOB,*POA/VAR*	AR	EA	FWSI	17685
022	999-02-00270	SLIDE,PKG,*POA/VAR*	AR	EA	FWSI	17685
023	999-03-00216	LOCKING,KNOB,*POA/VAR*	AR	EA	FWSI	17685
024	999-03-00217	KNOB,*POA/VAR*	AR	EA	FWSI	17685
025	284-99-00004	RET, LOCKING KNOB	2	EA	FWSI	8964
026	239-98-00023	SPACER,3/8DX3/16L,#6	4	EA	AMATOM	9316-SS-140-7
027	258-98-00006	TIE,CABLE 1/16TO5/8IN DIA	500	EA	THB/MML	TY-23M
028	127-99-00001	GROM,NYLON,EDGING	AR	EA	FWSI	3799
032	229-02-00163	SCREW,SET,4-40X1/8	AR	EA	PRCMT OPTION	MS51021-9
033	229-02-00084	SCREW,6-32X5/16 PAN HD	10	EA	PRCMT OPTION	MS51957-27
034	273-02-00006	WASHER,#6, FLT ST STL	6	EA	PRCMT OPTION	MS15795-805
035	273-02-00026	WASHER,#6,INT TOOTH	14	EA	PRCMT OPTION	MS35333-71
036	287-02-00003	NUT,HEX, 6-32	5	EA	PRCMT OPTION	MS35649-264
037	229-02-00099	SCREW,8-32X5/16 PAN HD	6	EA	PRCMT OPTION	MS51957-42
038	273-02-00027	WASHER,#8,INT TOOTH	6	EA	PRCMT OPTION	MS35333-72
039	273-02-00008	WASHER,#8, FLT ST STL	6	EA	PRCMT OPTION	MS15795-807
040	229-98-00033	SCREW,6-32X3/8 RND HD	1	EA	WECKESSER	N-632-3/8 ROUND HEAD
041	273-98-00022	WASHER,FLAT,FIBER,#6SCREW	1	EA	GEN CEMENT	6513
042	268-02-00015	TUBING,105*C,#6,PLASTIC	AR	FT	QVL	MIL-I-631 C/D
043	060-11-00002	CMPD,LOCKING,FINE THREAD	AR	EA	LOCTITE CORP	TYPE 222
044	229-02-00128	SCREW,1/4-20X3/8 PAN HD	3	EA	QVL	MS51957-77
045	273-02-00023	WASHER,1/4,EXT TOOTH	3	EA	PRCMT OPTION	MS35335-61
046	147-89-00707	SHIPPING KIT	1	EA	FWSI	45456

CONTINUED

PARTS LIST: 17676-4 MFR. NAME: FWSI PARENT STK. CONT. NO.: 089-89-00060

DESCRIPTION: DISCR,ASSY,TUNABLE PWB 4142-05 UM: EA ECO NO.: RCD CHG ENG. REV.: IA

ITEM NO.	COMPONENT STK. CONT. NO.	DESCRIPTION	QUANTITY	UM	MFR. NAME	MFR. PART/ASSY. NO.
047	027-98-00001	CAP,MALE SHORTING,CONTACT	1	EA	AMPHENOL/QVL	31-017/CW159/U
048	276-98-00081	WIRE,#22,STRD,WHT,600V	29	FT	QPL 22759/11	NAS-703-22-U-C-9
049	276-98-00058	WIRE,#18,STRD,BLK,600V	0.34	FT	QPL 22759/11	NAS-703-18-U-C-0
050	276-98-00064	WIRE,#18,STRD,WHT,600V	3	FT	QPL 22759/11	NAS-703-18-U-C-9
800	127-98-00007	GROM,FASTENER	14	EA	DZUS	GH 3
801	405-98-00004	STUD, FASTENER	14	EA	DZUS	AJ 3-25
C 001	301-23-27003	CAP,CR , 50V 2.7 UF 20%	1	EA	ERIE/MML	8141-050-651-275M
CR001	088-10-41480	DIODE,SW,75V/5UA,4NS/10MA	1	EA	CODI/MML	1N4148
CR002	088-10-41480	DIODE,SW,75V/5UA,4NS/10MA	1	EA	CODI/MML	1N4148
CR003	088-10-41480	DIODE,SW,75V/5UA,4NS/10MA	1	EA	CODI/MML	1N4148
L 001	055-89-00001	L,ASSY	1	EA	FWSI	956-1306
L 002	055-89-00001	L,ASSY	1	EA	FWSI	956-1306
R 001	616-02-10000	RES,1K 5% 1/4W	1	EA	ALLEN BRAD	RC07GF102J
REF001	905-05-00189	VARIABLE CHART	AR	EA	FWSI	17685
REF002	905-13-00102	WIRING DIAG, CARD FILE	AR	EA	FWSI	18481
REF003	905-13-00082	WIRING,DIAGRAM,PANEL,SUB	AR	EA	FWSI	18483
REF004	905-13-00083	WIRING,DIAGRAM,PANEL,REAR	AR	EA	FWSI	18484
REF005	999-01-01395	WIRING,DIAGRM,PS*POA/VAR*	AR	EA	FWSI	17685
REF006	905-25-00024	I/O CONN,TABLE	AR	EA	FWSI	18486
REF007	905-07-00162	SPEC,ENG,MODEL 4142	AR	EA	FWSI	18487
REF008	905-28-00002	INSTR,PKG,19-INCH DRAWER	AR	EA	FWSI	14962
REF009	075-89-00013	COVER,ASSY	AR	EA	FWSI	7547-1
REF010	075-89-00066	COVER,TOP,ASSY	AR	EA	FWSI	20779

END OF LIST

PARTS LIST: 17676-5 MFR. NAME: FWSI PARENT STK. CONT. NO.: 089-89-00061

DESCRIPTION: DSCRM,ASSY,TUNABLE PBW 4142-86 UM: EA ECO NO.: RC00002 ENG. REV.: J#

ITEM NO.	COMPONENT STK. CONT. NO.	DESCRIPTION	QUANTITY	UM	MFR. NAME	MFR. PART/ASSY. NO.
001	202-89-00029	PWR SPLY,ASSY	1	EA	FWSI	14976-3
002	042-89-00125	CHAS,ASSY,CARD	1	EA	FWSI	14980-3
003	191-89-00329	PANEL,ASSY REAR CONNECTOR	1	EA	FWSI	6245-11
004	191-89-00325	PANEL,ASSY,SUB	1	EA	FWSI	17688
005	191-89-00322	PANEL,ASSY,FRONT	1	EA	FWSI	17689
006	075-89-00066	COVER,TOP,ASSY	1	EA	FWSI	20779
007	075-89-00013	COVER,ASSY	1	EA	FWSI	7547-1
009	205-89-00711	PWA,INPUT CARD	1	EA	FWSI	17405
010	205-89-00721	PWA,BPIF SECTION 1	1	EA	FWSI	17390
011	205-89-00722	PWA,BPIF SECTION 2	1	EA	FWSI	17393
012	205-89-00723	PWA,TAPE SPEED COMPEN	1	EA	FWSI	17402
013	205-89-00719	PWA,LMTR,DET,SINGLE POLE	1	EA	FWSI	17396-2
014	205-89-00715	PWA,POLE PAIR	1	EA	FWSI	16657-3
015	205-89-00716	PWA,POLE PAIR	1	EA	FWSI	16657-4
016	205-89-00717	PWA,POLE PAIR	1	EA	FWSI	16657-5
017	205-89-00720	PWA,RGLTR & OUTPUT AMPL	1	EA	FWSI	17399
018	999-03-00214	KNOB,*POA/VAR*	AR	EA	FWSI	17685
019	111-98-00004	FASTNR, PAWL, LH	1	EA	SOUTHCO	27-N-254-J
020	111-98-00003	FASTNR, PAWL, RH	1	EA	SOUTHCO	27-N-253-J
021	999-03-00215	KNOB,*POA/VAR*	AR	EA	FWSI	17685
022	999-02-00270	SLIDE,PKG,*POA/VAR*	AR	EA	FWSI	17685
023	999-03-00216	LOCKING,KNOB,*POA/VAR*	AR	EA	FWSI	17685
024	999-03-00217	KNOB,*POA/VAR*	AR	EA	FWSI	17685
025	284-99-00004	RET, LOCKING KNOB	2	EA	FWSI	8964
026	239-98-00023	SPACER,3/8DX3/16L,#6	4	EA	AMATOM	9316-SS-140-7
027	258-98-00006	TIE,CABLE 1/16TO5/8IN DIA	500	EA	THB/MML	TY-23M
028	127-98-00020	GROM,RUBBER EDGING	1	FT	ATL INDIA	X-5284
033	229-02-00084	SCREW,6-32X5/16 PAN HD	10	EA	PRCMT OPTION	MS51957-27
034	273-02-00006	WASHER,#6, FLT ST STL	6	EA	PRCMT OPTION	MS15795-805
035	273-02-00026	WASHER,#6,INT TOOTH	14	EA	PRCMT OPTION	MS35333-71
036	287-02-00003	NUT,HEX, 6-32	5	EA	PRCMT OPTION	MS35649-264
037	229-02-00099	SCREW,8-32X5/16 PAN HD	6	EA	PRCMT OPTION	MS51957-42
038	273-02-00027	WASHER,#8,INT TOOTH	6	EA	PRCMT OPTION	MS35333-72
039	273-02-00008	WASHER,#8, FLT ST STL	6	EA	PRCMT OPTION	MS15795-807
040	229-98-00033	SCREW,6-32X3/8 RND HD	1	EA	WECKESSER	N-632-3/8 ROUND HEAD
041	273-98-00040	WASHER,#6,FIBRE .141 ID X	2	EA	H H SMITH	2162
042	268-02-00085	TUBING,# 8, EXTR TEF BLK	0.17	FT	PRCMT OPTION	MIL-I-22129
043	060-11-00002	CMPD,LOCKING,FINE THREAD	AR	EA	LOCTITE CORP	TYPE 222
044	229-02-00128	SCREW,1/4-20X3/8 PAN HD	3	EA	QVL	MS51957-77
045	273-02-00023	WASHER,1/4,EXT TOOTH	3	EA	PRCMT OPTION	MS35335-61
046	147-89-00707	SHIPPING KIT	1	EA	FWSI	45456

CONTINUED

PARTS LIST: 17676-5 MFR. NAME: FWSI PARENT STK. CONT. NO.: 089-89-00061

DESCRIPTION: DSCRM,ASSY,TUNABLE PBW 4142-86 UM: EA ECO NO.: RC00002 ENG. REV.: J#

ITEM NO.	COMPONENT STK. CONT. NO.	DESCRIPTION	QUANTITY	UM	MFR. NAME	MFR. PART/ASSY. NO.
047	027-98-00001	CAP,MALE SHORTING,CONTACT	1	EA	AMPHENOL/QVL	31-017/CW159/U
048	276-98-00081	WIRE,#22,STRD,WHT,600V	29	FT	QPL 22759/11	NAS-703-22-U-C-9
049	276-98-00058	WIRE,#18,STRD,BLK,600V	0.34	FT	QPL 22759/11	NAS-703-18-U-C-0
050	276-98-00064	WIRE,#18,STRD,WHT,600V	3	FT	QPL 22759/11	NAS-703-18-U-C-9
051	273-02-00030	WASHER,5/16,INT TOOTH	2	EA	PRCMT OPTION	MS35333-75
052	276-98-00102	WIRE,#24,STRD,WHT,600V	189.7	FT	QPL 22759/11	NAS-703-24-U-C-9
053	276-02-00029	WIRE,#20,SOL, WHT, 600V	1	FT	PRCMT OPTION	MIL-W-16878/4*SIL CTD*
054	276-98-00096	WIRE,#24,STRD,ORN,600V	136	FT	QPL 22759/11	NAS-703-24-U-C-3
055	276-98-00048	WIRE,#12,STRD,BLK,600V	12	FT	QPL 22759/11	NAS-703-12-U-C-0
056	276-98-00095	WIRE,#24,STRD,RED,600V	104	FT	QPL 22759/11	NAS-703-24-U-C-2
057	276-98-00069	WIRE,#20,STRD,GRY,600V	10	FT	QPL 22759/11	NAS-703-20-U-C-8
058	276-98-00070	WIRE,#20,STRD,WHT,600V	29.17	FT	QPL 22759/11	NAS-703-20-U-C-9
059	276-02-00016	WIRE,#24,STRD,TW PR,600V	0.21	FT	PRCMT OPTION	MIL-W-16878/4*SIL CTD*
060	232-98-00001	SHIELD,3/64 IN BRAIDED	5	FT	ALPHA,BELDEN	#1223,#8674
061	232-98-00004	SHIELD,1/8 IN FLAT BRAID	4.25	FT	ALPHA	1229
062	268-02-00020	TUBING,#10,EXTR TEF,CLEAR	4	FT	PRCMT OPTION	MIL-I-22129
063	276-98-00066	WIRE,#20,STRD,BLK,600V	5	FT	QPL 22759	NAS-703-20-U-C-0
064	276-99-00007	WIRE,#20,BUSS,SOLID	10	FT	FWSI	619-20
065	276-99-00006	WIRE,#18,BUSS,SOLID	1	FT	FWSI	619-18
066	276-99-00009	WIRE,#24,BUSS,SOLID	1	FT	FWSI	619-24
067	268-02-00024	TUBING,#16,EXTR TEF,CLEAR	3	FT	PRCMT OPTION	MIL-I-22129
068	268-02-00039	TUBING,#22,EXTR TEF,CLEAR	1	FT	PRCMT OPTION	MIL-I-22129
069	268-02-00028	TUBING,#20,EXTR TEF,CLR	1	FT	PRCMT OPTION	MIL-I-22129
070	268-02-00049	TUBING,#24,EXTR TEF,CLEAR	1	FT	PRCMT OPTION	MIL-I-22129
071	268-98-00008	TBG, 3/64,THERMO-FIT,BLU	0.17	FT	RACHEM/MML	RNF-100-3/64-BLU
072	268-98-00004	TBG, 3/32,THERMO-FIT,WHT	0.42	FT	RACHEM/MML	RNF-100-3/32-WHT
073	268-98-00002	TBG, 3/16,THERMO-FIT,WHT	0.5	FT	RACHEM/MML	RNF-100-3/16-WHT
074	268-98-00026	TBG, 3/4 ,THERMO-FIT,WHT	0.17	FT	RACHEM/MML	RNF-100-3/4-WHT
800	127-98-00007	GROM,FASTENER	14	EA	DZUS	GH 3
800	405-98-00004	STUD, FASTENER	14	EA	DZUS	AJ 3-25
C 001	301-23-27003	CAP,CR , 50V 2.7 UF 20%	1	EA	ERIE/MML	8141-050-651-275M
CR001	088-10-41480	DIODE,SW,75V/5UA,4NS/10MA	1	EA	CODI/MML	1N4148
CR002	088-10-41480	DIODE,SW,75V/5UA,4NS/10MA	1	EA	CODI/MML	1N4148
CR003	088-10-41480	DIODE,SW,75V/5UA,4NS/10MA	1	EA	CODI/MML	1N4148
L 001	055-89-00001	L,ASSY	1	EA	FWSI	956-1306
L 002	055-89-00001	L,ASSY	1	EA	FWSI	956-1306
R 001	616-02-10000	RES,1K 5% 1/4W	1	EA	ALLEN BRAD	RC07GF102J
REF001	905-05-00189	VARIABLE CHART	AR	EA	FWSI	17685
REF002	905-13-00101	WIRING DIAG,CARD FILE	AR	EA	FWSI	10020
REF003	905-13-00082	WIRING,DIAGRAM,PANEL,SUB	AR	EA	FWSI	18483
REF004	905-13-00083	WIRING,DIAGRAM,PANEL,REAR	AR	EA	FWSI	18484

CONTINUED

PARTS LIST: 17676-5 MFR. NAME: FWSI PARENT STK. CONT. NO.: 089-89-00061

DESCRIPTION: DSCRM,ASSY,TUNABLE PBW 4142-86 UM: EA ECO NO.: RC00002 ENG. REV.: J#

ITEM NO.	COMPONENT STK. CONT. NO.	DESCRIPTION	QUANTITY	UM	MFR. NAME	MFR. PART/ASSY. NO.
REF005	999-01-01395	WIRING,DIAGRM,PS*POA/VAR*	AR	EA	FWSI	17685
REF006	905-25-00024	I/O CONN,TABLE	AR	EA	FWSI	18486
REF007	905-07-00162	SPEC,ENG,MODEL 4142	AR	EA	FWSI	18487
REF008	905-28-00002	INSTR,PKG,19-INCH DRAWER	AR	EA	FWSI	14962
REF009	075-89-00013	COVER,ASSY	AR	EA	FWSI	7547-1
REF010	075-89-00066	COVER,TOP,ASSY	AR	EA	FWSI	20779

END OF LIST

PARTS LIST: 17688 MFR. NAME: FWSI PARENT STK. CONT. NO.: 191-89-00325

DESCRIPTION: PANEL,ASSY,SUB UM: EA ECO NO.: 0401018 ENG. REV.: SA

4142-86

ITEM NO.	COMPONENT STK. CONT. NO.	DESCRIPTION	QUANTITY	UM	MFR. NAME	MFR. PART/ASSY. NO.
001	191-89-00250	PANEL,ASSY,SUB	1	EA	FWSI	14137
002	128-99-00002	HANDLE, 5.080,CLR ANODIZE	2	EA	FWSI	7326
003	239-99-00009	SPACER,TEST POINT	1	EA	FWSI	6543
004	016-99-00042	BRKT, SWITCH MOUNTING	1	EA	FWSI	11977
005	239-98-00026	SPACER,SWITCH ECCO 800	1	EA	EE CO	S-36SG
006	284-98-00001	RET, SWITCH END PIECE	4	EA	EECO	E-36SG
007	229-02-00229	SCREW,10-32X1/2,100FLT HD	4	EA	PRCMT OPTION	MS24693-C272
008	273-02-00023	WASHER,1/4,EXT TOOTH	4	EA	PRCMT OPTION	MS35335-61
009	060-11-00002	CMPD,LOCKING,FINE THREAD	AR	EA	LOCTITE CORP	TYPE 222
010	229-02-00077	SCREW,4-40X1/2 PAN HD	4	EA	PRCMT OPTION	MS51957-17
011	229-02-00091	SCREW,6-32X1 PAN HD	2	EA	PRCMT OPTION	MS51957-34
012	287-02-00003	NUT,HEX, 6-32	2	EA	PRCMT OPTION	MS35649-264
013	273-02-00006	WASHER,#6, FLT ST STL	2	EA	PRCMT OPTION	MS15795-805
014	273-02-00026	WASHER,#6,INT TOOTH	2	EA	PRCMT OPTION	MS35333-71
015	229-02-00069	SCREW,2-56X1/2 PAN HD	24	EA	PRCMT OPTION	MS51957-7
016	287-99-00007	NUT,BAR,THUMBWHEEL SW MT	2	EA	FWSI	20989
017	287-99-00013	NUT BAR,THUMBWHEEL SW MT	2	EA	FWSI	20988-5
018	273-02-00024	WASHER,#2,INT TOOTH	24	EA	PRCMT OPTION	MS35333-69
021	049-98-00004	CLIP,MTG,FOR CRTG LIGHT	2	EA	INDL DEVICES	2212MC
022	194-98-00007	PIN,STOP	2	EA	EECO	191611
023	239-99-00086	SPACER,METER	1	EA	FWSI	17679
024	268-02-00028	TUBING,#20,EXTR TEF,CLR	0.5FT		PRCMT OPTION	MIL-I-22129
025	258-98-00002	TIE,CABLE 1/16TO 1 3/4IN	1	EA	MML13	SST2S
026	049-99-00002	CLIP,METER MTG	4	EA	FWSI	31801
027	060-11-00019	CMPD,EPOXY,GENL PURPOSE	AR	KT	HYSOL	0151
028	229-02-00075	SCREW,4-40X3/8 PAN HD	6	EA	PRCMT OPTION	MS51957-15
C 001	999-01-01398	CAP,*POA/VAR*	AR	EA	FWSI	17685
CR001	088-97-02760	DIO,GE,SW,100V,TRR 300NS	1	EA	GI/MML	1N276
CR002	088-97-02760	DIO,GE,SW,100V,TRR 300NS	1	EA	GI/MML	1N276
DS001	155-89-00001	LIGHT,ASSY, DECIMAL	1	EA	FWSI	7327
DS002	155-89-00001	LIGHT,ASSY, DECIMAL	1	EA	FWSI	7327
DS003	155-89-00001	LIGHT,ASSY, DECIMAL	1	EA	FWSI	7327
DS004	155-89-00001	LIGHT,ASSY, DECIMAL	1	EA	FWSI	7327
DS005	155-98-00011	LIGHT,28V, 40MA	1	EA	ELDEMA	CFW-22556-06
DS007	155-98-00011	LIGHT,28V, 40MA	1	EA	ELDEMA	CFW-22556-06
DS009	155-89-00001	LIGHT,ASSY, DECIMAL	1	EA	FWSI	7327
DS010	155-89-00001	LIGHT,ASSY, DECIMAL	1	EA	FWSI	7327
M 001	170-99-00024	METER,EDGEWISE,0 UA/0,200	1	EA	FWSI	16016-4
M 002	170-99-00022	METER,EDGEWISE,-100 L,&10	1	EA	FWSI	16016-2
R 001	201-98-00077	POT, 1K 5% 10T,.030 RES	1	EA	CLAROSTAT	CM35479
R 002	201-98-00077	POT, 1K 5% 10T,.030 RES	1	EA	CLAROSTAT	CM35479

CONTINUED

PARTS LIST: 17688 MFR. NAME: FWSI PARENT STK. CONT. NO.: 191-89-00325

DESCRIPTION: PANEL,ASSY,SUB UM: EA ECO NO.: 0401018 ENG. REV.: SA

4142-86

ITEM NO.	COMPONENT STK. CONT. NO.	DESCRIPTION	QUANTITY	UM	MFR. NAME	MFR. PART/ASSY. NO.
R 003	616-02-20000	RES,2K 5% 1/4W	1	EA	ALLEN BRAD	RC07GF202J
R 004	616-02-20000	RES,2K 5% 1/4W	1	EA	ALLEN BRAD	RC07GF202J
S 001	250-89-00044	SW,ROTARY,6P,2POS,7SECT	1	EA	FWSI	19611-1
S 002	250-89-00073	SW,ROT,2 P,5 POS 1 SECT	1	EA	FWSI	19611-29
S 003	250-89-00007	SWITCH,ASSY, THUMBWHEEL	1	EA	FWSI	11604
S 004	250-98-00015	SW,THUMBWHL,BCD&CMPLM	1	EA	EECO	806-G
S 005	250-98-00015	SW,THUMBWHL,BCD&CMPLM	1	EA	EECO	806-G
S 006	250-98-00015	SW,THUMBWHL,BCD&CMPLM	1	EA	EECO	806-G
S 007	250-98-00015	SW,THUMBWHL,BCD&CMPLM	1	EA	EECO	806-G
S 008	250-99-00019	SWITCH,ROTARY,MODIFIED	1	EA	FWSI	14369
S 009	250-89-00007	SWITCH,ASSY, THUMBWHEEL	1	EA	FWSI	11604
S 010	250-98-00032	SWITCH,THUMBWHL BCD 10POS	1	EA	EECO	802-G
S 011	250-98-00032	SWITCH,THUMBWHL BCD 10POS	1	EA	EECO	802-G
S 012	250-98-00032	SWITCH,THUMBWHL BCD 10POS	1	EA	EECO	802-G
S 013	250-98-00284	SW,PB,LIT,10A 2Z,ASSY,PB,	1	EA	OAK	572-2115-11-327
S 014	250-99-00019	SWITCH,ROTARY,MODIFIED	1	EA	FWSI	14369
TP001	143-98-00008	JACK,TEST PT,PNL TYPE,WHT	1	EA	E.F.JOHNSON	105-0251-001
TP002	143-98-00008	JACK,TEST PT,PNL TYPE,WHT	1	EA	E.F.JOHNSON	105-0251-001
TP003	143-98-00008	JACK,TEST PT,PNL TYPE,WHT	1	EA	E.F.JOHNSON	105-0251-001
TP004	143-98-00008	JACK,TEST PT,PNL TYPE,WHT	1	EA	E.F.JOHNSON	105-0251-001
REF001	905-05-00189	VARIABLE CHART	AR	EA	FWSI	17685
REF002	905-13-00082	WIRING,DIAGRAM,PANEL,SUB	AR	EA	FWSI	18483

END OF LIST

DATE 05/09/85 FAIRCHILD WESTON INC. CODE IDENT. 06141 PAGE 1

PARTS LIST: 14980-3 MFR. NAME: FWSI PARENT STK. CONT. NO.: 042-89-00125

DESCRIPTION: CHAS,ASSY,CARD UM: EA ECO NO.: 0400538 ENG. REV.: G*

4142-84

ITEM NO.	COMPONENT STK. CONT. NO.	DESCRIPTION	QUANTITY	UM	MFR. NAME	MFR. PART/ASSY. NO.
001	042-99-00067	CHAS,CARD FILE	1	EA	FWSI	14979
002	063-98-00114	CONN,PWB,36CONT,SLDR EYE	8	EA	VKNG/MML	2VH36/1AB5
003	401-98-00001	GUIDE,CARD FILE	18	EA	CKT STRU	88055-3
004	229-02-00074	SCREW,4-40X5/16 PAN HD	56	EA	PRCMT OPTION	MS51957-14
006	273-02-00025	WASHER,#4,INT TOOTH	74	EA	PRCMT OPTION	MS35333-70
007	287-02-00002	NUT,HEX, 4-40	19	EA	PRCMT OPTION	MS35649-244
008	229-02-00077	SCREW,4-40X1/2 PAN HD	18	EA	PRCMT OPTION	MS51957-17
009	273-02-00004	WASHER,#4, FLT ST STL	18	EA	PRCMT OPTION	MS15795-803
010	063-97-00001	CONN,RECP.PCB,72 CONTACTS	1	EA	AMPH	225-23621-101
011	232-89-00009	SHIELD,ASSY	5	EA	FWSI	17682
012	196-99-00147	PLATE,AIR DEFLECTION	1	EA	FWSI	10292
013	255-98-00010	TERM,SLDR LUG, #4 STUD	1	EA	SHAKEPROOF	2106-04-00
014	196-99-00176	PLATE,DEFLECTION,AIR	1	EA	FWSI	21839
017	229-02-00073	SCREW,4-40X1/4 PAN HD	1	EA	PRCMT OPTION	MS51957-13
018	273-02-00005	WASHER,#4, FLT ST STL	2	EA	PRCMT OPTION	MS15795-804

END OF LIST

DATE 05/09/85 FAIRCHILD WESTON INC. CODE IDENT. 06141 PAGE 1

PARTS LIST: 17405 MFR. NAME: FWSI PARENT STK. CONT. NO.: 205-89-00711

DESCRIPTION: PWA,INPUT CARD UM: EA ECO NO.: 0400684 ENG. REV.: U*

4142-06

ITEM NO.	COMPONENT STK. CONT. NO.	DESCRIPTION	QUANTITY	UM	MFR. NAME	MFR. PART/ASSY. NO.
001	204-89-00382	PWB,INPUT CARD	1	EA	FWSI	17404
002	299-99-00003	EJCTR,CARD,.062BD,POSN3	2	EA	FWSI	6477-2
004	189-98-00025	PAD,XSTR TO-5 4 PIN,.022	2	EA	THERMALLOY	7717-15N
C 001	337-14-68003	CAP. 6.8MF 10% 35V	1	EA	FWSI	601
C 002	337-14-68003	CAP. 6.8MF 10% 35V	1	EA	FWSI	601
C 003	337-14-68003	CAP. 6.8MF 10% 35V	1	EA	FWSI	601
C 004	337-14-68003	CAP. 6.8MF 10% 35V	1	EA	FWSI	601
C 005	337-14-68003	CAP. 6.8MF 10% 35V	1	EA	FWSI	601
C 006	337-14-68003	CAP. 6.8MF 10% 35V	1	EA	FWSI	601
C 007	337-14-68003	CAP. 6.8MF 10% 35V	1	EA	FWSI	601
C 008	337-14-68003	CAP. 6.8MF 10% 35V	1	EA	FWSI	601
C 009	337-14-68003	CAP. 6.8MF 10% 35V	1	EA	FWSI	601
C 010	337-14-68003	CAP. 6.8MF 10% 35V	1	EA	FWSI	601
C 011	337-14-68003	CAP. 6.8MF 10% 35V	1	EA	FWSI	601
C 012	337-14-68003	CAP. 6.8MF 10% 35V	1	EA	FWSI	601
C 013	337-14-68003	CAP. 6.8MF 10% 35V	1	EA	FWSI	601
C 014	337-12-22004	CAP., 22MF 10% 15V	1	EA	FWSI	601
C 015	337-12-22004	CAP., 22MF 10% 15V	1	EA	FWSI	601
C 016	339-13-10005	CAP, 100MF 10% 20V D CASE	1	EA	FWSI	601
C 017	337-14-68003	CAP. 6.8MF 10% 35V	1	EA	FWSI	601
C 018	337-14-68003	CAP. 6.8MF 10% 35V	1	EA	FWSI	601
C 019	304-08-03309	CAP. 33PF .5PF 500V	1	EA	FWSI	600
C 020	304-01-01509	CAP. 15PF .5PF 500V	1	EA	FWSI	600
C 021	337-12-22004	CAP., 22MF 10% 15V	1	EA	FWSI	601
C 022	337-12-22004	CAP., 22MF 10% 15V	1	EA	FWSI	601
C 023	337-14-68003	CAP. 6.8MF 10% 35V	1	EA	FWSI	601
C 024	337-14-68003	CAP. 6.8MF 10% 35V	1	EA	FWSI	601
C 025	337-14-68003	CAP. 6.8MF 10% 35V	1	EA	FWSI	601
C 026	337-14-68003	CAP. 6.8MF 10% 35V	1	EA	FWSI	601
C 027	337-14-68003	CAP. 6.8MF 10% 35V	1	EA	FWSI	601
C 029	339-13-10005	CAP, 100MF 10% 20V D CASE	1	EA	FWSI	601
C 030	339-13-10005	CAP, 100MF 10% 20V D CASE	1	EA	FWSI	601
C 031	337-14-68003	CAP. 6.8MF 10% 35V	1	EA	FWSI	601
C 032	337-14-68003	CAP. 6.8MF 10% 35V	1	EA	FWSI	601
C 033	337-14-68003	CAP. 6.8MF 10% 35V	1	EA	FWSI	601
C 034	337-14-68003	CAP. 6.8MF 10% 35V	1	EA	FWSI	601
C 035	337-14-68003	CAP. 6.8MF 10% 35V	1	EA	FWSI	601
C 036	337-14-68003	CAP. 6.8MF 10% 35V	1	EA	FWSI	601
C 037	304-08-02009	CAP.,20PF .5PF 500V	1	EA	FWSI	600
C 038	361-01-20001	CAP,PM , 100V .020 UF 10%	1	EA	ARCO/MML	1MD-1-203K
C 039	304-08-02009	CAP.,20PF .5PF 500V	1	EA	FWSI	600

CONTINUED

PARTS LIST: 17405 MFR. NAME: FWSI PARENT STK. CONT. NO.: 205-89-00711

DESCRIPTION: PWA,INPUT CARD UM: EA ECO NO.: 0400684 ENG. REV.: U*

4142-06

ITEM NO.	COMPONENT STK. CONT. NO.	DESCRIPTION	QUANTITY	UM	MFR. NAME	MFR. PART/ASSY. NO.
C 040	361-01-20001	CAP,PM , 100V .020 UF 10%	1	EA	ARCO/MML	1MD-1-203K
C 041	337-14-68003	CAP. 6.8MF 10% 35V	1	EA	FWSI	601
C 042	337-14-68003	CAP. 6.8MF 10% 35V	1	EA	FWSI	601
CR001	088-10-41480	DIODE,SW,75V/5UA,4NS/10MA	1	EA	CODI/MML	1N4148
CR002	088-10-41480	DIODE,SW,75V/5UA,4NS/10MA	1	EA	CODI/MML	1N4148
CR003	088-10-41480	DIODE,SW,75V/5UA,4NS/10MA	1	EA	CODI/MML	1N4148
CR004	088-10-41480	DIODE,SW,75V/5UA,4NS/10MA	1	EA	CODI/MML	1N4148
CR005	088-10-41480	DIODE,SW,75V/5UA,4NS/10MA	1	EA	CODI/MML	1N4148
CR006	088-10-41480	DIODE,SW,75V/5UA,4NS/10MA	1	EA	CODI/MML	1N4148
CR007	088-10-41480	DIODE,SW,75V/5UA,4NS/10MA	1	EA	CODI/MML	1N4148
CR008	088-10-41480	DIODE,SW,75V/5UA,4NS/10MA	1	EA	CODI/MML	1N4148
CR009	088-10-41480	DIODE,SW,75V/5UA,4NS/10MA	1	EA	CODI/MML	1N4148
CR010	088-99-00329	DIODE,ZENER, 6.2V,1N753A	1	EA	FWSI	642-07
CR012	088-10-41480	DIODE,SW,75V/5UA,4NS/10MA	1	EA	CODI/MML	1N4148
CR013	088-99-00199	DIODE,ZENER, 5.6V,1N752A	1	EA	FWSI	642-06
CR014	088-10-41480	DIODE,SW,75V/5UA,4NS/10MA	1	EA	CODI/MML	1N4148
CR015	088-99-00199	DIODE,ZENER, 5.6V,1N752A	1	EA	FWSI	642-06
CR016	088-99-00329	DIODE,ZENER, 6.2V,1N753A	1	EA	FWSI	642-07
CR017	088-10-41480	DIODE,SW,75V/5UA,4NS/10MA	1	EA	CODI/MML	1N4148
CR018	088-99-00199	DIODE,ZENER, 5.6V,1N752A	1	EA	FWSI	642-06
CR019	088-10-41480	DIODE,SW,75V/5UA,4NS/10MA	1	EA	CODI/MML	1N4148
CR020	088-99-00199	DIODE,ZENER, 5.6V,1N752A	1	EA	FWSI	642-06
CR021	088-10-40040	DIODE,RECT 400V,1A IR.01	1	EA	CODI/MML	1N4004
CR022	088-10-40040	DIODE,RECT 400V,1A IR.01	1	EA	CODI/MML	1N4004
CR024	088-10-41480	DIODE,SW,75V/5UA,4NS/10MA	1	EA	CODI/MML	1N4148
CR025	088-10-41480	DIODE,SW,75V/5UA,4NS/10MA	1	EA	CODI/MML	1N4148
CR026	088-10-41480	DIODE,SW,75V/5UA,4NS/10MA	1	EA	CODI/MML	1N4148
CR027	088-10-41480	DIODE,SW,75V/5UA,4NS/10MA	1	EA	CODI/MML	1N4148
CR028	088-10-41480	DIODE,SW,75V/5UA,4NS/10MA	1	EA	CODI/MML	1N4148
CR029	088-10-41480	DIODE,SW,75V/5UA,4NS/10MA	1	EA	CODI/MML	1N4148
CR030	088-10-41480	DIODE,SW,75V/5UA,4NS/10MA	1	EA	CODI/MML	1N4148
CR031	088-10-41480	DIODE,SW,75V/5UA,4NS/10MA	1	EA	CODI/MML	1N4148
CR032	088-10-41480	DIODE,SW,75V/5UA,4NS/10MA	1	EA	CODI/MML	1N4148
CR033	088-10-41480	DIODE,SW,75V/5UA,4NS/10MA	1	EA	CODI/MML	1N4148
CR034	088-10-41480	DIODE,SW,75V/5UA,4NS/10MA	1	EA	CODI/MML	1N4148
CR035	088-10-41480	DIODE,SW,75V/5UA,4NS/10MA	1	EA	CODI/MML	1N4148
CR036	088-10-41480	DIODE,SW,75V/5UA,4NS/10MA	1	EA	CODI/MML	1N4148
K 002	219-99-00028	RELAY,2 FORM A,GOLD CONT	1	EA	FWSI/MML	28531-21
K 003	219-99-00028	RELAY,2 FORM A,GOLD CONT	1	EA	FWSI/MML	28531-21
K 004	219-99-00028	RELAY,2 FORM A,GOLD CONT	1	EA	FWSI/MML	28531-21
K 005	219-99-00028	RELAY,2 FORM A,GOLD CONT	1	EA	FWSI/MML	28531-21

CONTINUED

PARTS LIST: 17405 MFR. NAME: FWSI PARENT STK. CONT. NO.: 205-89-00711

DESCRIPTION: PWA,INPUT CARD UM: EA ECO NO.: 0400684 ENG. REV.: U*

4142-06

ITEM NO.	COMPONENT STK. CONT. NO.	DESCRIPTION	QUANTITY	UM	MFR. NAME	MFR. PART/ASSY. NO.
K 006	219-99-00028	RELAY,2 FORM A,GOLD CONT	1	EA	FWSI/MML	28531-21
K 007	219-99-00028	RELAY,2 FORM A,GOLD CONT	1	EA	FWSI/MML	28531-21
K 008	219-99-00028	RELAY,2 FORM A,GOLD CONT	1	EA	FWSI/MML	28531-21
K 009	219-99-00028	RELAY,2 FORM A,GOLD CONT	1	EA	FWSI/MML	28531-21
K 010	219-99-00018	RELAY,2 FORM A,RHOD CONT	1	EA	FWSI/MML	28531-11
Q 001	263-10-35650	XSTR,NPN 40MHZ,30V AMPL	1	EA	FCH/MML	2N3565
Q 002	263-10-09290	XSTR,NPN AMPL,LOW NOISE	1	EA	FCH/MML	2N929,A
Q 003	263-10-17110	XSTR,NPN AMPL,SWITCH,HFE	1	EA	FCH/MML	2N1711
Q 004	263-10-17110	XSTR,NPN AMPL,SWITCH,HFE	1	EA	FCH/MML	2N1711
Q 005	263-10-35650	XSTR,NPN 40MHZ,30V AMPL	1	EA	FCH/MML	2N3565
Q 006	263-10-35650	XSTR,NPN 40MHZ,30V AMPL	1	EA	FCH/MML	2N3565
Q 007	263-10-35650	XSTR,NPN 40MHZ,30V AMPL	1	EA	FCH/MML	2N3565
Q 008	263-10-35650	XSTR,NPN 40MHZ,30V AMPL	1	EA	FCH/MML	2N3565
Q 009	263-10-35650	XSTR,NPN 40MHZ,30V AMPL	1	EA	FCH/MML	2N3565
Q 010	263-10-35650	XSTR,NPN 40MHZ,30V AMPL	1	EA	FCH/MML	2N3565
Q 011	263-10-39470	XSTR,NPN 40V SW-AMPL,HFE	1	EA	FCH/MML	2N3947
Q 012	263-10-39470	XSTR,NPN 40V SW-AMPL,HFE	1	EA	FCH/MML	2N3947
Q 013	263-10-35650	XSTR,NPN 40MHZ,30V AMPL	1	EA	FCH/MML	2N3565
Q 014	263-10-35650	XSTR,NPN 40MHZ,30V AMPL	1	EA	FCH/MML	2N3565
Q 015	263-10-35650	XSTR,NPN 40MHZ,30V AMPL	1	EA	FCH/MML	2N3565
Q 016	263-10-35650	XSTR,NPN 40MHZ,30V AMPL	1	EA	FCH/MML	2N3565
Q 017	263-10-35660	XSTR,NPN 40MHZ,40V AMPL	1	EA	FCH/MML	2N3566 OR PN3566
Q 018	263-10-35660	XSTR,NPN 40MHZ,40V AMPL	1	EA	FCH/MML	2N3566 OR PN3566
Q 019	263-10-35650	XSTR,NPN 40MHZ,30V AMPL	1	EA	FCH/MML	2N3565
Q 020	263-10-35650	XSTR,NPN 40MHZ,30V AMPL	1	EA	FCH/MML	2N3565
Q 021	263-97-00093	XSTR,PNP,SWITCH/AMPL,50V	1	EA	FCH/MML	2N3251
Q 022	263-10-35650	XSTR,NPN 40MHZ,30V AMPL	1	EA	FCH/MML	2N3565
Q 023	263-10-35650	XSTR,NPN 40MHZ,30V AMPL	1	EA	FCH/MML	2N3565
Q 024	263-10-35650	XSTR,NPN 40MHZ,30V AMPL	1	EA	FCH/MML	2N3565
Q 025	263-10-35650	XSTR,NPN 40MHZ,30V AMPL	1	EA	FCH/MML	2N3565
Q 026	263-10-35660	XSTR,NPN 40MHZ,40V AMPL	1	EA	FCH/MML	2N3566 OR PN3566
Q 027	263-10-35660	XSTR,NPN 40MHZ,40V AMPL	1	EA	FCH/MML	2N3566 OR PN3566
Q 028	263-10-35660	XSTR,NPN 40MHZ,40V AMPL	1	EA	FCH/MML	2N3566 OR PN3566
Q 029	263-10-35660	XSTR,NPN 40MHZ,40V AMPL	1	EA	FCH/MML	2N3566 OR PN3566
R 001	616-02-10000	RES,1K 5% 1/4W	1	EA	ALLEN BRAD	RC07GF102J
R 002	616-02-02209	RES,22 OHM 5% 1/4W	1	EA	ALLEN BRAD	RC07GF220J
R 003	616-02-10009	RES,100 OHM 5% 1/4W	1	EA	ALLEN BRAD	RC07GF101J
R 004	616-02-10009	RES,100 OHM 5% 1/4W	1	EA	ALLEN BRAD	RC07GF101J
R 005	616-02-02209	RES,22 OHM 5% 1/4W	1	EA	ALLEN BRAD	RC07GF220J
R 006	616-02-62001	RES,62K 5% 1/4W	1	EA	ALLEN BRAD	RC07GF623J
R 007	616-02-10002	RES,100K 5% 1/4W	1	EA	ALLEN BRAD	RC07GF104J

CONTINUED

PARTS LIST: 17405 MFR. NAME: FWSI PARENT STK. CONT. NO.: 205-89-00711

DESCRIPTION: PWA,INPUT CARD UM: EA ECO NO.: 0400684 ENG. REV.: U*

4142-06

ITEM NO.	COMPONENT STK. CONT. NO.	DESCRIPTION	QUANTITY	UM	MFR. NAME	MFR. PART/ASSY. NO.
R 008	616-02-16001	RES,16K 5% 1/4W	1	EA	ALLEN BRAD	RC07GF163J
R 009	616-02-16001	RES,16K 5% 1/4W	1	EA	ALLEN BRAD	RC07GF163J
R 010	616-02-18001	RES,18K 5% 1/4W	1	EA	ALLEN BRAD	RC07GF183J
R 011	616-02-47009	RES,470 OHM 5% 1/4W	1	EA	ALLEN BRAD	RC07GF471J
R 012	616-02-11001	RES,11K 5% 1/4W	1	EA	ALLEN BRAD	RC07GF113J
R 013	616-02-47009	RES,470 OHM 5% 1/4W	1	EA	ALLEN BRAD	RC07GF471J
R 014	616-02-10001	RES,10K 5% 1/4W	1	EA	ALLEN BRAD	RC07GF103J
R 015	616-02-91000	RES,9.1K 5% 1/4W	1	EA	ALLEN BRAD	RC07GF912J
R 016	616-02-33009	RES,330 OHM 5% 1/4W	1	EA	ALLEN BRAD	RC07GF331J
R 017	616-02-51009	RES,510 OHM 5% 1/4W	1	EA	ALLEN BRAD	RC07GF511J
R 018	605-09-49900	RES. 4.99K 1% 1/8W	1	EA	FWSI	625
R 019	605-09-15400	RES. 1.54 K 1% 1/8W	1	EA	FWSI	625
R 020	605-09-22100	RES. 2.21K 1% 1/8W	1	EA	FWSI	625
R 021	605-09-28700	RES. 2.87K 1% 1/8W	1	EA	FWSI	625
R 022	605-09-37400	RES. 3.74K 1% 1/8W	1	EA	FWSI	625
R 023	616-02-02209	RES,22 OHM 5% 1/4W	1	EA	ALLEN BRAD	RC07GF220J
R 024	616-02-02209	RES,22 OHM 5% 1/4W	1	EA	ALLEN BRAD	RC07GF220J
R 025	605-09-24900	RES. 2.49K 1% 1/8W	1	EA	FWSI	625
R 026	605-09-26709	RES. 267 OHM 1% 1/8W	1	EA	FWSI	625
R 027	605-09-63409	RES. 634 OHM 1% 1/8W	1	EA	FWSI	625
R 028	605-09-86609	RES. 866 OHM 1% 1/8W	1	EA	FWSI	625
R 029	605-09-17400	RES. 1.74K 1% 1/8W	1	EA	FWSI	625
R 030	616-02-02209	RES,22 OHM 5% 1/4W	1	EA	ALLEN BRAD	RC07GF220J
R 031	616-02-02209	RES,22 OHM 5% 1/4W	1	EA	ALLEN BRAD	RC07GF220J
R 032	616-02-02209	RES,22 OHM 5% 1/4W	1	EA	ALLEN BRAD	RC07GF220J
R 033	616-02-15000	RES,1.5K 5% 1/4W	1	EA	ALLEN BRAD	RC07GF152J
R 034	616-02-10001	RES,10K 5% 1/4W	1	EA	ALLEN BRAD	RC07GF103J
R 035	616-02-10009	RES,100 OHM 5% 1/4W	1	EA	ALLEN BRAD	RC07GF101J
R 036	616-02-91000	RES,9.1K 5% 1/4W	1	EA	ALLEN BRAD	RC07GF912J
R 037	616-02-10000	RES,1K 5% 1/4W	1	EA	ALLEN BRAD	RC07GF102J
R 038	616-02-10009	RES,100 OHM 5% 1/4W	1	EA	ALLEN BRAD	RC07GF101J
R 039	616-02-24000	RES,2.4K 5% 1/4W	1	EA	ALLEN BRAD	RC07GF242J
R 040	616-02-47009	RES,470 OHM 5% 1/4W	1	EA	ALLEN BRAD	RC07GF471J
R 041	616-02-51000	RES,5.1K 5% 1/4W	1	EA	ALLEN BRAD	RC07GF512J
R 042	616-02-91000	RES,9.1K 5% 1/4W	1	EA	ALLEN BRAD	RC07GF912J
R 043	616-02-15000	RES,1.5K 5% 1/4W	1	EA	ALLEN BRAD	RC07GF152J
R 044	616-02-10000	RES,1K 5% 1/4W	1	EA	ALLEN BRAD	RC07GF102J
R 045	616-02-51000	RES,5.1K 5% 1/4W	1	EA	ALLEN BRAD	RC07GF512J
R 046	616-02-51000	RES,5.1K 5% 1/4W	1	EA	ALLEN BRAD	RC07GF512J
R 047	616-02-18001	RES,18K 5% 1/4W	1	EA	ALLEN BRAD	RC07GF183J
R 048	616-02-47009	RES,470 OHM 5% 1/4W	1	EA	ALLEN BRAD	RC07GF471J

CONTINUED

PARTS LIST: 17405 MFR. NAME: FWSI PARENT STK. CONT. NO.: 205-89-00711

DESCRIPTION: PWA,INPUT CARD UM: EA ECO NO.: 0400684 ENG. REV.: U*

4142-06

ITEM NO.	COMPONENT STK. CONT. NO.	DESCRIPTION	QUANTITY	UM	MFR. NAME	MFR. PART/ASSY. NO.
R 049	616-02-39000	RES,3.9K 5% 1/4W	1	EA	ALLEN BRAD	RC07GF392J
R 050	616-02-91000	RES,9.1K 5% 1/4W	1	EA	ALLEN BRAD	RC07GF912J
R 051	616-02-91000	RES,9.1K 5% 1/4W	1	EA	ALLEN BRAD	RC07GF912J
R 052	616-02-27001	RES,27K 5% 1/4W	1	EA	ALLEN BRAD	RC07GF273J
R 054	616-02-02209	RES,22 OHM 5% 1/4W	1	EA	ALLEN BRAD	RC07GF220J
R 055	605-09-49900	RES. 4.99K 1% 1/8W	1	EA	FWSI	625
R 056	605-09-60409	RES. 604 OHM 1% 1/8W	1	EA	FWSI	625
R 057	605-09-17800	RES. 1.78K 1% 1/8W	1	EA	FWSI	625
R 058	605-09-26100	RES. 2.61K 1% 1/8W	1	EA	FWSI	625
R 059	605-09-63401	RES. 63.4K 1% 1/8W	1	EA	FWSI	625
R 060	616-02-02209	RES,22 OHM 5% 1/4W	1	EA	ALLEN BRAD	RC07GF220J
R 061	616-02-02209	RES,22 OHM 5% 1/4W	1	EA	ALLEN BRAD	RC07GF220J
R 062	605-09-13700	RES. 1.37K 1% 1/8W	1	EA	FWSI	625
R 063	605-09-10000	RES. 1K 1% 1/8W	1	EA	FWSI	625
R 064	605-09-80609	RES. 806 OHM 1% 1/8W	1	EA	FWSI	625
R 065	605-09-56209	RES. 562 OHM 1% 1/8W	1	EA	FWSI	625
R 066	616-02-02209	RES,22 OHM 5% 1/4W	1	EA	ALLEN BRAD	RC07GF220J
R 067	616-02-02209	RES,22 OHM 5% 1/4W	1	EA	ALLEN BRAD	RC07GF220J
R 068	616-02-47009	RES,470 OHM 5% 1/4W	1	EA	ALLEN BRAD	RC07GF471J
R 069	616-02-47000	RES,4.7K 5% 1/4W	1	EA	ALLEN BRAD	RC07GF472J
R 070	616-02-33009	RES,330 OHM 5% 1/4W	1	EA	ALLEN BRAD	RC07GF331J
R 071	616-02-82000	RES,8.2K 5% 1/4W	1	EA	ALLEN BRAD	RC07GF822J
R 072	616-02-27000	RES,2.7K 5% 1/4W	1	EA	ALLEN BRAD	RC07GF272J
R 073	201-98-00297	POT,TRMR,5.0 K 10% .75W	1	EA	BECK/MML	89PR5K
R 074	616-02-10001	RES,10K 5% 1/4W	1	EA	ALLEN BRAD	RC07GF103J
R 075	616-02-18001	RES,18K 5% 1/4W	1	EA	ALLEN BRAD	RC07GF183J
R 076	616-02-30000	RES,3K 5% 1/4W	1	EA	ALLEN BRAD	RC07GF302J
R 077	616-02-30000	RES,3K 5% 1/4W	1	EA	ALLEN BRAD	RC07GF302J
R 078	616-02-13001	RES,13K 5% 1/4W	1	EA	ALLEN BRAD	RC07GF133J
R 079	616-02-56000	RES,5.6K 5% 1/4W	1	EA	ALLEN BRAD	RC07GF562J
R 080	616-02-43000	RES,4.3K 5% 1/4W	1	EA	ALLEN BRAD	RC07GF432J
R 081	616-02-30000	RES,3K 5% 1/4W	1	EA	ALLEN BRAD	RC07GF302J
R 082	616-02-13001	RES,13K 5% 1/4W	1	EA	ALLEN BRAD	RC07GF133J
R 083	616-02-02209	RES,22 OHM 5% 1/4W	1	EA	ALLEN BRAD	RC07GF220J
R 084	616-02-02209	RES,22 OHM 5% 1/4W	1	EA	ALLEN BRAD	RC07GF220J
R 085	616-02-13001	RES,13K 5% 1/4W	1	EA	ALLEN BRAD	RC07GF133J
R 086	616-02-02209	RES,22 OHM 5% 1/4W	1	EA	ALLEN BRAD	RC07GF220J
R 087	616-02-30000	RES,3K 5% 1/4W	1	EA	ALLEN BRAD	RC07GF302J
R 088	616-02-20001	RES,20K 5% 1/4W	1	EA	ALLEN BRAD	RC07GF203J
R 090	616-02-20001	RES,20K 5% 1/4W	1	EA	ALLEN BRAD	RC07GF203J
R 091	616-02-18001	RES,18K 5% 1/4W	1	EA	ALLEN BRAD	RC07GF183J

CONTINUED

PARTS LIST: 17405 MFR. NAME: FWSI PARENT STK. CONT. NO.: 205-89-00711

DESCRIPTION: PWA,INPUT CARD UM: EA ECO NO.: 0400684 ENG. REV.: U*

4142-06

ITEM NO.	COMPONENT STK. CONT. NO.	DESCRIPTION	QUANTITY	UM	MFR. NAME	MFR. PART/ASSY. NO.
R 092	616-02-10001	RES,10K 5% 1/4W	1	EA	ALLEN BRAD	RC07GF103J
R 093	616-02-47000	RES,4.7K 5% 1/4W	1	EA	ALLEN BRAD	RC07GF472J
R 094	616-02-62000	RES,6.2K 5% 1/4W	1	EA	ALLEN BRAD	RC07GF622J
R 095	616-02-62000	RES,6.2K 5% 1/4W	1	EA	ALLEN BRAD	RC07GF622J
R 096	616-02-30000	RES,3K 5% 1/4W	1	EA	ALLEN BRAD	RC07GF302J
R 097	616-02-20001	RES,20K 5% 1/4W	1	EA	ALLEN BRAD	RC07GF203J
R 099	616-02-18001	RES,18K 5% 1/4W	1	EA	ALLEN BRAD	RC07GF183J
R 100	616-02-10001	RES,10K 5% 1/4W	1	EA	ALLEN BRAD	RC07GF103J
R 101	616-02-56000	RES,5.6K 5% 1/4W	1	EA	ALLEN BRAD	RC07GF562J
R 102	616-02-62000	RES,6.2K 5% 1/4W	1	EA	ALLEN BRAD	RC07GF622J
R 103	616-02-62000	RES,6.2K 5% 1/4W	1	EA	ALLEN BRAD	RC07GF622J
R 104	616-02-47000	RES,4.7K 5% 1/4W	1	EA	ALLEN BRAD	RC07GF472J
R 105	616-02-56000	RES,5.6K 5% 1/4W	1	EA	ALLEN BRAD	RC07GF562J
R 106	616-02-27000	RES,2.7K 5% 1/4W	1	EA	ALLEN BRAD	RC07GF272J
R 107	616-02-18001	RES,18K 5% 1/4W	1	EA	ALLEN BRAD	RC07GF183J
R 108	616-02-36000	RES,3.6K 5% 1/4W	1	EA	ALLEN BRAD	RC07GF362J
R 109	616-02-02209	RES,22 OHM 5% 1/4W	1	EA	ALLEN BRAD	RC07GF220J
R 110	616-02-47000	RES,4.7K 5% 1/4W	1	EA	ALLEN BRAD	RC07GF472J
R 111	616-02-10000	RES,1K 5% 1/4W	1	EA	ALLEN BRAD	RC07GF102J
R 112	616-02-10000	RES,1K 5% 1/4W	1	EA	ALLEN BRAD	RC07GF102J
R 113	616-02-47000	RES,4.7K 5% 1/4W	1	EA	ALLEN BRAD	RC07GF472J
R 114	616-02-36001	RES,36K 5% 1/4W	1	EA	ALLEN BRAD	RC07GF363J
R 115	616-02-36001	RES,36K 5% 1/4W	1	EA	ALLEN BRAD	RC07GF363J
R 116	605-09-24900	RES. 2.49K 1% 1/8W	1	EA	FWSI	625
R 117	616-02-10000	RES,1K 5% 1/4W	1	EA	ALLEN BRAD	RC07GF102J
R 118	616-02-10000	RES,1K 5% 1/4W	1	EA	ALLEN BRAD	RC07GF102J
R 119	605-09-10001	RES. 10.0K 1% 1/8W	1	EA	FWSI	625
R 120	605-09-49900	RES. 4.99K 1% 1/8W	1	EA	FWSI	625
R 121	616-02-51000	RES,5.1K 5% 1/4W	1	EA	ALLEN BRAD	RC07GF512J
TP001	143-98-00017	JACK,TEST PT,PW TYPE,RED	1	EA	AMP INC.	3-582340-2
TP002	143-98-00017	JACK,TEST PT,PW TYPE,RED	1	EA	AMP INC.	3-582340-2
TP003	143-98-00017	JACK,TEST PT,PW TYPE,RED	1	EA	AMP INC.	3-582340-2
Z 001	046-89-00010	IC,ASSY,FOLLOWER,PNP	1	EA	FWSI	12182
Z 002	046-89-00009	IC,ASSY,FOLLOWER,NPN	1	EA	FWSI	12181
Z 003	046-89-00010	IC,ASSY,FOLLOWER,PNP	1	EA	FWSI	12182
Z 004	046-89-00009	IC,ASSY,FOLLOWER,NPN	1	EA	FWSI	12181
REF001	905-01-00538	SCHEMATIC,PWA,INPUT CARD	AR	EA	FWSI	17403
REF002	905-04-00002	SPEC,COMPONENT SPACING	AR	EA	FWSI	9500-1

END OF LIST

DATE 08/28/85 FAIRCHILD WESTON INC. CODE IDENT. 06141 PAGE 1

PARTS LIST: 17390 MFR. NAME: FWSI PARENT STK. CONT. NO.: 205-89-00721

DESCRIPTION: PWA,BPIF SECTION 1 UM: EA ECO NO.: 0401386 ENG. REV.: PB
4142-86

ITEM NO.	COMPONENT STK. CONT. NO.	DESCRIPTION	QUANTITY	UM	MFR. NAME	MFR. PART/ASSY. NO.
001	204-89-00280	PWB,BPIF SECTION 1	1	EA	FWSI	17389
003	299-99-00005	EJCTR,CARD,.062BD,POSN5	2	EA	FWSI	6477-4
004	276-99-00008	WIRE,#22,BUSS,SOLID	0.1	FT	FWSI	619-22
005	276-02-00037	WIRE,#22,SOL, WHT, 600V	0.17	FT	PROMT OPTION	MIL-W-16878/4*SIL CTD*
C 003	337-14-68003	CAP. 6.8MF 10% 35V	1	EA	FWSI	601
C 004	337-14-68003	CAP. 6.8MF 10% 35V	1	EA	FWSI	601
C 007	337-14-68003	CAP. 6.8MF 10% 35V	1	EA	FWSI	601
C 010	337-14-68003	CAP. 6.8MF 10% 35V	1	EA	FWSI	601
C 032	304-01-00709	CAP. 7PF .5PF 500V	1	EA	FWSI	600
C 033	320-98-00006	CAP.,TRIM.,3-15PF 200V	1	EA	ERIE/MML	538-011,3-15PF,D
C 035	320-98-00006	CAP.,TRIM.,3-15PF 200V	1	EA	ERIE/MML	538-011,3-15PF,D
C 036	320-98-00006	CAP.,TRIM.,3-15PF 200V	1	EA	ERIE/MML	538-011,3-15PF,D
C 037	320-98-00006	CAP.,TRIM.,3-15PF 200V	1	EA	ERIE/MML	538-011,3-15PF,D
C 039	320-98-00006	CAP.,TRIM.,3-15PF 200V	1	EA	ERIE/MML	538-011,3-15PF,D
C 040	707-01-17852	CAP., .1785MF 1% 50V	1	EA	FWSI	904
C 041	305-20-16000	CAP. 1600PF 1% 500V	1	EA	FWSI	600
C 042	304-08-03609	CAP. 36PF .5PF 500V	1	EA	FWSI	600
C 043	320-98-00006	CAP.,TRIM.,3-15PF 200V	1	EA	ERIE/MML	538-011,3-15PF,D
C 044	707-01-16201	CAP., .0162MF 1% 50V	1	EA	FWSI	904
C 047	320-98-00006	CAP.,TRIM.,3-15PF 200V	1	EA	ERIE/MML	538-011,3-15PF,D
C 048	320-98-00006	CAP.,TRIM.,3-15PF 200V	1	EA	ERIE/MML	538-011,3-15PF,D
C 052	337-14-68003	CAP. 6.8MF 10% 35V	1	EA	FWSI	601
C 053	337-14-68003	CAP. 6.8MF 10% 35V	1	EA	FWSI	601
C 060	384-05-14002	CAP., .1400MF 1% 50V	1	EA	FWSI	949
C 061	707-01-12401	CAP., .0124MF 1% 50V	1	EA	FWSI	904
C 066	337-14-68003	CAP. 6.8MF 10% 35V	1	EA	FWSI	601
C 072	304-41-56009	CAP. 560PF 1% 300V	1	EA	FWSI	600
CR001	088-10-40040	DIODE,RECT 400V,1A IR.01	1	EA	CODI/MML	1N4004
CR002	088-10-40040	DIODE,RECT 400V,1A IR.01	1	EA	CODI/MML	1N4004
CR003	088-99-00169	DIODE,STABISTOR,IF .64V	1	EA	FCH/MML	1N816
CR004	088-99-00169	DIODE,STABISTOR,IF .64V	1	EA	FCH/MML	1N816
CR005	088-10-40040	DIODE,RECT 400V,1A IR.01	1	EA	CODI/MML	1N4004
CR006	088-99-00169	DIODE,STABISTOR,IF .64V	1	EA	FCH/MML	1N816
K 001	219-99-00028	RELAY,2 FORM A,GOLD CONT	1	EA	FWSI/MML	28531-21
K 002	219-99-00028	RELAY,2 FORM A,GOLD CONT	1	EA	FWSI/MML	28531-21
K 003	219-99-00028	RELAY,2 FORM A,GOLD CONT	1	EA	FWSI/MML	28531-21
K 004	219-99-00028	RELAY,2 FORM A,GOLD CONT	1	EA	FWSI/MML	28531-21
K 005	219-99-00028	RELAY,2 FORM A,GOLD CONT	1	EA	FWSI/MML	28531-21
K 006	219-99-00028	RELAY,2 FORM A,GOLD CONT	1	EA	FWSI/MML	28531-21
K 007	219-99-00028	RELAY,2 FORM A,GOLD CONT	1	EA	FWSI/MML	28531-21
K 008	219-99-00028	RELAY,2 FORM A,GOLD CONT	1	EA	FWSI/MML	28531-21

CONTINUED

PARTS LIST: 17390 MFR. NAME: FWSI PARENT STK. CONT. NO.: 205-89-00721

DESCRIPTION: PWA,BPIF SECTION 1 UM: EA ECO NO.: 0401386 ENG. REV.: PB
4142-86

ITEM NO.	COMPONENT STK. CONT. NO.	DESCRIPTION	QUANTITY	UM	MFR. NAME	MFR. PART/ASSY. NO.
K 009	219-99-00028	RELAY,2 FORM A,GOLD CONT	1	EA	FWSI/MML	28531-21
K 010	219-99-00028	RELAY,2 FORM A,GOLD CONT	1	EA	FWSI/MML	28531-21
K 011	219-99-00028	RELAY,2 FORM A,GOLD CONT	1	EA	FWSI/MML	28531-21
K 012	219-99-00028	RELAY,2 FORM A,GOLD CONT	1	EA	FWSI/MML	28531-21
K 013	219-99-00028	RELAY,2 FORM A,GOLD CONT	1	EA	FWSI/MML	28531-21
K 014	219-99-00033	RELAY,3 FORM A,GOLD CONT	1	EA	FWSI/MML	28531-26
K 015	219-99-00033	RELAY,3 FORM A,GOLD CONT	1	EA	FWSI/MML	28531-26
K 016	219-99-00033	RELAY,3 FORM A,GOLD CONT	1	EA	FWSI/MML	28531-26
K 017	219-99-00018	RELAY,2 FORM A,RHOD CONT	1	EA	FWSI/MML	28531-11
K 018	219-99-00033	RELAY,3 FORM A,GOLD CONT	1	EA	FWSI/MML	28531-26
K 019	219-99-00033	RELAY,3 FORM A,GOLD CONT	1	EA	FWSI/MML	28531-26
K 020	219-99-00018	RELAY,2 FORM A,RHOD CONT	1	EA	FWSI/MML	28531-11
K 021	219-99-00018	RELAY,2 FORM A,RHOD CONT	1	EA	FWSI/MML	28531-11
K 022	219-99-00028	RELAY,2 FORM A,GOLD CONT	1	EA	FWSI/MML	28531-21
L 001	055-89-00001	L,ASSY	1	EA	FWSI	956-1306
L 002	055-89-00001	L,ASSY	1	EA	FWSI	956-1306
Q 009	263-10-39470	XSTR,NPN 40V SW-AMPL,HFE	1	EA	FCH/MML	2N3947
Q 010	263-10-39470	XSTR,NPN 40V SW-AMPL,HFE	1	EA	FCH/MML	2N3947
Q 011	263-97-00093	XSTR,PNP,SWITCH/AMPL,50V	1	EA	FCH/MML	2N3251
Q 012	263-10-39470	XSTR,NPN 40V SW-AMPL,HFE	1	EA	FCH/MML	2N3947
Q 013	263-10-39470	XSTR,NPN 40V SW-AMPL,HFE	1	EA	FCH/MML	2N3947
Q 014	263-10-39470	XSTR,NPN 40V SW-AMPL,HFE	1	EA	FCH/MML	2N3947
Q 015	263-97-00093	XSTR,PNP,SWITCH/AMPL,50V	1	EA	FCH/MML	2N3251
R 001	616-02-02209	RES,22 OHM 5% 1/4W	1	EA	ALLEN BRAD	RC07GF220J
R 002	616-02-02209	RES,22 OHM 5% 1/4W	1	EA	ALLEN BRAD	RC07GF220J
R 003	605-09-10000	RES. 1K 1% 1/8W	1	EA	FWSI	625
R 004	605-09-10000	RES. 1K 1% 1/8W	1	EA	FWSI	625
R 007	605-09-37409	RES. 374 OHM 1% 1/8W	1	EA	FWSI	625
R 011	605-09-10001	RES. 10.0K 1% 1/8W	1	EA	FWSI	625
R 012	605-09-10001	RES. 10.0K 1% 1/8W	1	EA	FWSI	625
R 014	616-02-02209	RES,22 OHM 5% 1/4W	1	EA	ALLEN BRAD	RC07GF220J
R 016	605-09-49900	RES. 4.99K 1% 1/8W	1	EA	FWSI	625
R 017	605-09-49900	RES. 4.99K 1% 1/8W	1	EA	FWSI	625
R 018	605-09-24900	RES. 2.49K 1% 1/8W	1	EA	FWSI	625
R 019	605-09-24900	RES. 2.49K 1% 1/8W	1	EA	FWSI	625
R 027	616-02-05109	RES,51 OHM 5% 1/4W	1	EA	ALLEN BRAD	RC07GF510J
R 028	605-09-24900	RES. 2.49K 1% 1/8W	1	EA	FWSI	625
R 029	605-09-24900	RES. 2.49K 1% 1/8W	1	EA	FWSI	625
R 030	616-02-02209	RES,22 OHM 5% 1/4W	1	EA	ALLEN BRAD	RC07GF220J
R 031	616-02-02209	RES,22 OHM 5% 1/4W	1	EA	ALLEN BRAD	RC07GF220J
R 032	605-09-12400	RES. 1.24K 1% 1/8W	1	EA	FWSI	625

CONTINUED

PARTS LIST: 17390 MFR. NAME: FWSI PARENT STK. CONT. NO.: 205-89-00721

DESCRIPTION: PWA,BPIF SECTION 1 UM: EA ECO NO.: 0401386 ENG. REV.: PB
4142-86

ITEM NO.	COMPONENT STK. CONT. NO.	DESCRIPTION	QUANTITY	UM	MFR. NAME	MFR. PART/ASSY. NO.
R 033	605-09-12400	RES. 1.24K 1% 1/8W	1	EA	FWSI	625
R 034	605-09-10002	RES. 100K 1% 1/8W	1	EA	FWSI	625
R 035	605-09-10002	RES. 100K 1% 1/8W	1	EA	FWSI	625
R 036	605-09-49901	RES. 49.9K 1% 1/8W	1	EA	FWSI	625
R 037	605-09-49901	RES. 49.9K 1% 1/8W	1	EA	FWSI	625
R 038	616-02-33000	RES,3.3K 5% 1/4W	1	EA	ALLEN BRAD	RC07GF332J
R 039	616-02-12000	RES,1.2K 5% 1/4W	1	EA	ALLEN BRAD	RC07GF122J
R 040	616-02-75000	RES,7.5K 5% 1/4W	1	EA	ALLEN BRAD	RC07GF752J
R 041	605-09-24901	RES. 24.9K 1% 1/8W	1	EA	FWSI	625
R 042	605-09-24901	RES. 24.9K 1% 1/8W	1	EA	FWSI	625
R 043	616-02-22009	RES,220 OHM 5% 1/4W	1	EA	ALLEN BRAD	RC07GF221J
R 044	616-02-18009	RES,180 OHM 5% 1/4W	1	EA	ALLEN BRAD	RC07GF181J
R 045	605-09-12401	RES. 12.4K 1% 1/8W	1	EA	FWSI	625
R 046	605-09-12401	RES. 12.4K 1% 1/8W	1	EA	FWSI	625
R 047	616-02-01009	RES,10 OHM 5% 1/4W	1	EA	ALLEN BRAD	RC07GF100J
R 048	616-02-01009	RES,10 OHM 5% 1/4W	1	EA	ALLEN BRAD	RC07GF100J
R 050	605-09-46400	RES. 4.64K 1% 1/8W	1	EA	FWSI	625
R 051	616-02-05109	RES,51 OHM 5% 1/4W	1	EA	ALLEN BRAD	RC07GF510J
R 052	616-02-05109	RES,51 OHM 5% 1/4W	1	EA	ALLEN BRAD	RC07GF510J
R 053	616-02-22009	RES,220 OHM 5% 1/4W	1	EA	ALLEN BRAD	RC07GF221J
R 054	605-09-24900	RES. 2.49K 1% 1/8W	1	EA	FWSI	625
R 055	616-02-56009	RES,560 OHM 5% 1/4W	1	EA	ALLEN BRAD	RC07GF561J
R 056	616-02-10003	RES,1 MEG 5% 1/4W	1	EA	ALLEN BRAD	RC07GF105J
R 057	616-02-10003	RES,1 MEG 5% 1/4W	1	EA	ALLEN BRAD	RC07GF105J
R 058	616-02-13001	RES,13K 5% 1/4W	1	EA	ALLEN BRAD	RC07GF133J
R 059	616-02-51002	RES,510K 5% 1/4W	1	EA	ALLEN BRAD	RC07GF514J
R 060	616-02-51002	RES,510K 5% 1/4W	1	EA	ALLEN BRAD	RC07GF514J
R 061	616-02-24002	RES,240K 5% 1/4W	1	EA	ALLEN BRAD	RC07GF244J
R 062	616-02-24002	RES,240K 5% 1/4W	1	EA	ALLEN BRAD	RC07GF244J
R 063	616-02-12002	RES,120K 5% 1/4W	1	EA	ALLEN BRAD	RC07GF124J
R 064	616-02-12002	RES,120K 5% 1/4W	1	EA	ALLEN BRAD	RC07GF124J
R 065	605-09-28000	RES. 2.8K 1% 1/8W	1	EA	FWSI	625
R 066	605-09-16900	RES. 1.69K 1% 1/8W	1	EA	FWSI	625
R 067	605-09-34000	RES. 3.40K 1% 1/8W	1	EA	FWSI	625
R 068	605-09-49900	RES. 4.99K 1% 1/8W	1	EA	FWSI	625
R 069	616-02-05109	RES,51 OHM 5% 1/4W	1	EA	ALLEN BRAD	RC07GF510J
R 070	616-02-33000	RES,3.3K 5% 1/4W	1	EA	ALLEN BRAD	RC07GF332J
R 071	616-02-02209	RES,22 OHM 5% 1/4W	1	EA	ALLEN BRAD	RC07GF220J
R 072	616-02-18001	RES,18K 5% 1/4W	1	EA	ALLEN BRAD	RC07GF183J
R 073	616-02-15001	RES,15K 5% 1/4W	1	EA	ALLEN BRAD	RC07GF153J
R 074	616-02-39000	RES,3.9K 5% 1/4W	1	EA	ALLEN BRAD	RC07GF392J

CONTINUED

PARTS LIST: 17390 MFR. NAME: FWSI PARENT STK. CONT. NO.: 205-89-00721

DESCRIPTION: PWA,BPIF SECTION 1 UM: EA ECO NO.: 0401386 ENG. REV.: PB
4142-86

ITEM NO.	COMPONENT STK. CONT. NO.	DESCRIPTION	QUANTITY	UM	MFR. NAME	MFR. PART/ASSY. NO.
R 075	616-02-43009	RES. 430 OHM 5% 1/4W	1	EA	ALLEN BRAD	RC07GF431J
TP001	143-98-00017	JACK,TEST PT,PW TYPE,RED	1	EA	AMP INC.	3-582340-2
TP002	143-98-00017	JACK,TEST PT,PW TYPE,RED	1	EA	AMP INC.	3-582340-2
Z 001	046-89-00009	IC,ASSY,FOLLOWER,NPN	1	EA	FWSI	12181
Z 002	046-89-00010	IC,ASSY,FOLLOWER,PNP	1	EA	FWSI	12182
?C 001	304-08-02009	CAP.,20PF .5PF 500V	1	EA	FWSI	600
?C 002	304-01-00209	CAP. 2PF .5PF 500V	1	EA	FWSI	600
?C 008	304-13-05609	CAP. 56PF 1% 500V	1	EA	FWSI	600
?C 013	304-01-00409	CAP. 4PF .5PF 500V	1	EA	FWSI	600
?C 014	304-01-00509	CAP. 5PF .5PF 500V	1	EA	FWSI	600
?C 015	304-01-00209	CAP. 2PF .5PF 500V	1	EA	FWSI	600
?C 016	304-08-02009	CAP.,20PF .5PF 500V	1	EA	FWSI	600
?C 019	304-01-00209	CAP. 2PF .5PF 500V	1	EA	FWSI	600
?C 021	304-01-00709	CAP. 7PF .5PF 500V	1	EA	FWSI	600
?C 029	304-01-00309	CAP. 3PF .5PF 500V	1	EA	FWSI	600
?C 030	304-08-02209	CAP.,22PF .5PF 500V	1	EA	FWSI	600
?C 031	304-20-16009	CAP. 160PF 1% 500V	1	EA	FWSI	600
?C 034	304-20-16009	CAP. 160PF 1% 500V	1	EA	FWSI	600
?C 038	304-08-03009	CAP. 30PF .5PF 500V	1	EA	FWSI	600
?C 041	304-13-06209	CAP. 62PF 1% 500V	1	EA	FWSI	600
?C 045	305-20-13800	CAP. 1380PF 1% 500V	1	EA	FWSI	600
?C 046	304-20-15009	CAP. 150PF 1% 500V	1	EA	FWSI	600
?C 049	304-20-14009	CAP. 140PF 1% 500V	1	EA	FWSI	600
?C 054	304-01-00209	CAP. 2PF .5PF 500V	1	EA	FWSI	600
?C 065	304-01-01209	CAP. 12PF .5PF 500V	1	EA	FWSI	600
?C 067	304-13-05509	CAP. 55PF 1% 500V	1	EA	FWSI	600
?C 068	304-08-02809	CAP. 28PF .5PF 500V	1	EA	FWSI	600
?C 069	304-13-05709	CAP. 57PF 1% 500V	1	EA	FWSI	600
?C 070	304-01-01309	CAP. 13PF .5PF 500V	1	EA	FWSI	600
?C 071	304-00-00000	CAP,*TVAR*	AR	EA	FWSI	00000
REF001	905-01-00542	SCHEMATIC,PWA,BPIF SECT 1	AR	EA	FWSI	17388
REF002	905-04-00001	SPEC,COMPONENT SPACING	AR	EA	FWSI	9500

END OF LIST

PARTS LIST: 17393 MFR. NAME: FWSI PARENT STK. CONT. NO.: 205-89-00722
DESCRIPTION: PWA,BPIF SECTION 2 UM: EA ECO NO.: 0401432 ENG. REV.: XB
4142-04

ITEM NO.	COMPONENT STK. CONT. NO.	DESCRIPTION	QUANTITY	UM	MFR. NAME	MFR. PART/ASSY. NO.
001	204-89-00278	PWB,BPIF SECTION 2	1	EA	FWSI	17392
002	189-98-00004	PAD,XSTR 4 PIN*USE OPTL*	7	EA	DEL BLINN	100-000-NY
003	299-99-00006	EJCTR,CARD,.062BD,POSN6	2	EA	FWSI	6477-5
004	276-99-00008	WIRE,#22,BUSS,SOLID	.25	FT	FWSI	619-22
005	071-98-00060	CORE,BEAD EMI/RFI SUPRESR	2	EA	FCC/STPL	56-590-65/3B;57-0180
006	140-98-00047	INSUL,COMP LEAD,GLAS BEAD	2	EA	CRAFT HOUSE	215
C 003	337-14-68003	CAP. 6.8MF 10% 35V	1	EA	FWSI	601
C 004	337-14-68003	CAP. 6.8MF 10% 35V	1	EA	FWSI	601
C 007	337-14-68003	CAP. 6.8MF 10% 35V	1	EA	FWSI	601
C 010	337-14-68003	CAP. 6.8MF 10% 35V	1	EA	FWSI	601
C 033	320-98-00006	CAP.,TRIM.,3-15PF 200V	1	EA	ERIE/MML	538-011,3-15PF,D
C 035	320-98-00006	CAP.,TRIM.,3-15PF 200V	1	EA	ERIE/MML	538-011,3-15PF,D
C 036	320-98-00006	CAP.,TRIM.,3-15PF 200V	1	EA	ERIE/MML	538-011,3-15PF,D
C 037	320-98-00006	CAP.,TRIM.,3-15PF 200V	1	EA	ERIE/MML	538-011,3-15PF,D
C 039	320-98-00006	CAP.,TRIM.,3-15PF 200V	1	EA	ERIE/MML	538-011,3-15PF,D
C 040	707-01-27002	CAP., .270MF 1% 50V	1	EA	FWSI	904
C 043	320-98-00006	CAP.,TRIM.,3-15PF 200V	1	EA	ERIE/MML	538-011,3-15PF,D
C 044	707-01-24201	CAP., .0242MF 1% 50V	1	EA	FWSI	904
C 047	320-98-00006	CAP.,TRIM.,3-15PF 200V	1	EA	ERIE/MML	538-011,3-15PF,D
C 048	320-98-00006	CAP.,TRIM.,3-15PF 200V	1	EA	ERIE/MML	538-011,3-15PF,D
C 049	304-20-12009	CAP. 120PF 1% 500V	1	EA	FWSI	600
C 052	337-14-68003	CAP. 6.8MF 10% 35V	1	EA	FWSI	601
C 053	337-14-68003	CAP. 6.8MF 10% 35V	1	EA	FWSI	601
C 060	707-01-15102	CAP., .151MF 1% 50V	1	EA	FWSI	904
C 061	707-01-13701	CAP., .0137MF 1% 50V	1	EA	FWSI	904
C 062	337-14-68003	CAP. 6.8MF 10% 35V	1	EA	FWSI	601
C 064	304-00-00000	CAP,*TVAR*	AR	EA	FWSI	00000
C 065	304-00-00000	CAP,*TVAR*	AR	EA	FWSI	00000
C 066	304-41-56009	CAP. 560PF 1% 300V	1	EA	FWSI	600
CR001	088-10-40040	DIODE,RECT 400V,1A IR.01	1	EA	CODI/MML	1N4004
CR002	088-10-40040	DIODE,RECT 400V,1A IR.01	1	EA	CODI/MML	1N4004
CR003	088-99-00169	DIODE,STABISTOR,IF .64V	1	EA	FCH/MML	1N816
CR004	088-99-00169	DIODE,STABISTOR,IF .64V	1	EA	FCH/MML	1N816
CR005	088-10-40040	DIODE,RECT 400V,1A IR.01	1	EA	CODI/MML	1N4004
CR006	088-99-00169	DIODE,STABISTOR,IF .64V	1	EA	FCH/MML	1N816
K 001	219-99-00028	RELAY,2 FORM A,GOLD CONT	1	EA	FWSI/MML	28531-21
K 002	219-99-00028	RELAY,2 FORM A,GOLD CONT	1	EA	FWSI/MML	28531-21
K 003	219-99-00028	RELAY,2 FORM A,GOLD CONT	1	EA	FWSI/MML	28531-21
K 004	219-99-00028	RELAY,2 FORM A,GOLD CONT	1	EA	FWSI/MML	28531-21
K 005	219-99-00028	RELAY,2 FORM A,GOLD CONT	1	EA	FWSI/MML	28531-21
K 006	219-99-00028	RELAY,2 FORM A,GOLD CONT	1	EA	FWSI/MML	28531-21
K 007	219-99-00028	RELAY,2 FORM A,GOLD CONT	1	EA	FWSI/MML	28531-21

(CONTINUED)

ITEM NO.	COMPONENT STK. CONT. NO.	DESCRIPTION	QUANTITY	UM	MFR. NAME	MFR. PART/ASSY. NO.
K 008	219-99-00028	RELAY,2 FORM A,GOLD CONT	1	EA	FWSI/MML	28531-21
K 009	219-99-00028	RELAY,2 FORM A,GOLD CONT	1	EA	FWSI/MML	28531-21
K 010	219-99-00028	RELAY,2 FORM A,GOLD CONT	1	EA	FWSI/MML	28531-21
K 011	219-99-00028	RELAY,2 FORM A,GOLD CONT	1	EA	FWSI/MML	28531-21
K 012	219-99-00028	RELAY,2 FORM A,GOLD CONT	1	EA	FWSI/MML	28531-21
K 013	219-99-00028	RELAY,2 FORM A,GOLD CONT	1	EA	FWSI/MML	28531-21
K 014	219-99-00033	RELAY,3 FORM A,GOLD CONT	1	EA	FWSI/MML	28531-26
K 015	219-99-00033	RELAY,3 FORM A,GOLD CONT	1	EA	FWSI/MML	28531-26
K 016	219-99-00033	RELAY,3 FORM A,GOLD CONT	1	EA	FWSI/MML	28531-26
K 017	219-99-00018	RELAY,2 FORM A,RHOD CONT	1	EA	FWSI/MML	28531-11
K 018	219-99-00033	RELAY,3 FORM A,GOLD CONT	1	EA	FWSI/MML	28531-26
K 019	219-99-00033	RELAY,3 FORM A,GOLD CONT	1	EA	FWSI/MML	28531-26
K 020	219-99-00018	RELAY,2 FORM A,RHOD CONT	1	EA	FWSI/MML	28531-11
K 021	219-99-00018	RELAY,2 FORM A,RHOD CONT	1	EA	FWSI/MML	28531-11
K 022	219-99-00028	RELAY,2 FORM A,GOLD CONT	1	EA	FWSI/MML	28531-21
L 001	055-89-00001	L,ASSY	1	EA	FWSI	956-1306
L 002	055-89-00001	L,ASSY	1	EA	FWSI	956-1306
L 003	044-89-00001	CHOKE,ASSY,FERRITE,WB,750	1	EA	FWSI	39424
Q 009	263-10-39470	XSTR,NPN 40V SW-AMPL,HFE	1	EA	FCH/MML	2N3947
Q 010	263-10-39470	XSTR,NPN 40V SW-AMPL,HFE	1	EA	FCH/MML	2N3947
Q 011	263-97-00093	XSTR,PNP,SWITCH/AMPL,50V	1	EA	FCH/MML	2N3251
Q 012	263-10-39470	XSTR,NPN 40V SW-AMPL,HFE	1	EA	FCH/MML	2N3947
Q 013	263-10-39470	XSTR,NPN 40V SW-AMPL,HFE	1	EA	FCH/MML	2N3947
Q 014	263-10-39470	XSTR,NPN 40V SW-AMPL,HFE	1	EA	FCH/MML	2N3947
Q 015	263-97-00093	XSTR,PNP,SWITCH/AMPL,50V	1	EA	FCH/MML	2N3251
R 001	616-02-02209	RES,22 OHM 5% 1/4W	1	EA	ALLEN BRAD	RC07GF220J
R 002	616-02-02209	RES,22 OHM 5% 1/4W	1	EA	ALLEN BRAD	RC07GF220J
R 003	605-09-10000	RES. 1K 1% 1/8W	1	EA	FWSI	625
R 004	605-09-10000	RES. 1K 1% 1/8W	1	EA	FWSI	625
R 007	605-09-45309	RES. 453 OHM 1% 1/8W	1	EA	FWSI	625
R 011	605-09-10001	RES. 10.0K 1% 1/8W	1	EA	FWSI	625
R 012	605-09-10001	RES. 10.0K 1% 1/8W	1	EA	FWSI	625
R 014	616-02-02209	RES,22 OHM 5% 1/4W	1	EA	ALLEN BRAD	RC07GF220J
R 016	605-09-49900	RES. 4.99K 1% 1/8W	1	EA	FWSI	625
R 017	605-09-49900	RES. 4.99K 1% 1/8W	1	EA	FWSI	625
R 019	605-09-24900	RES. 2.49K 1% 1/8W	1	EA	FWSI	625
R 027	616-02-05109	RES,51 OHM 5% 1/4W	1	EA	ALLEN BRAD	RC07GF510J
R 028	605-09-24900	RES. 2.49K 1% 1/8W	1	EA	FWSI	625
R 029	605-09-24900	RES. 2.49K 1% 1/8W	1	EA	FWSI	625
R 030	616-02-02209	RES,22 OHM 5% 1/4W	1	EA	ALLEN BRAD	RC07GF220J
R 031	616-02-02209	RES,22 OHM 5% 1/4W	1	EA	ALLEN BRAD	RC07GF220J
R 032	605-09-12400	RES. 1.24K 1% 1/8W	1	EA	FWSI	625

(CONTINUED)

ITEM NO.	COMPONENT STK. CONT. NO.	DESCRIPTION	QUANTITY	UM	MFR. NAME	MFR. PART/ASSY. NO.
R 033	605-09-12400	RES. 1.24K 1% 1/8W	1	EA	FWSI	625
R 034	605-09-10002	RES. 100K 1% 1/8W	1	EA	FWSI	625
R 035	605-09-10002	RES. 100K 1% 1/8W	1	EA	FWSI	625
R 036	605-09-49901	RES. 49.9K 1% 1/8W	1	EA	FWSI	625
R 037	605-09-49901	RES. 49.9K 1% 1/8W	1	EA	FWSI	625
R 038	616-02-33000	RES,3.3K 5% 1/4W	1	EA	ALLEN BRAD	RC07GF332J
R 039	616-02-12000	RES,1.2K 5% 1/4W	1	EA	ALLEN BRAD	RC07GF122J
R 040	616-02-75000	RES,7.5K 5% 1/4W	1	EA	ALLEN BRAD	RC07GF752J
R 041	605-09-24901	RES. 24.9K 1% 1/8W	1	EA	FWSI	625
R 042	605-09-24901	RES. 24.9K 1% 1/8W	1	EA	FWSI	625
R 043	616-02-05109	RES,51 OHM 5% 1/4W	1	EA	ALLEN BRAD	RC07GF510J
R 044	616-02-39000	RES,3.9K 5% 1/4W	1	EA	ALLEN BRAD	RC07GF392J
R 045	605-09-12401	RES. 12.4K 1% 1/8W	1	EA	FWSI	625
R 046	605-09-12401	RES. 12.4K 1% 1/8W	1	EA	FWSI	625
R 047	616-02-01009	RES,10 OHM 5% 1/4W	1	EA	ALLEN BRAD	RC07GF100J
R 048	616-02-01009	RES,10 OHM 5% 1/4W	1	EA	ALLEN BRAD	RC07GF100J
R 050	605-09-34800	RES. 3.48K 1% 1/8W	1	EA	FWSI	625
R 051	616-02-05109	RES,51 OHM 5% 1/4W	1	EA	ALLEN BRAD	RC07GF510J
R 052	616-02-05109	RES,51 OHM 5% 1/4W	1	EA	ALLEN BRAD	RC07GF510J
R 053	616-02-05109	RES,51 OHM 5% 1/4W	1	EA	ALLEN BRAD	RC07GF510J
R 054	605-09-24900	RES. 2.49K 1% 1/8W	1	EA	FWSI	625
R 055	616-02-56009	RES,560 OHM 5% 1/4W	1	EA	ALLEN BRAD	RC07GF561J
R 056	616-02-10003	RES,1 MEG 5% 1/4W	1	EA	ALLEN BRAD	RC07GF105J
R 057	616-02-10003	RES,1 MEG 5% 1/4W	1	EA	ALLEN BRAD	RC07GF105J
R 058	616-02-13001	RES,13K 5% 1/4W	1	EA	ALLEN BRAD	RC07GF133J
R 059	616-02-51002	RES,510K 5% 1/4W	1	EA	ALLEN BRAD	RC07GF514J
R 060	616-02-51002	RES,510K 5% 1/4W	1	EA	ALLEN BRAD	RC07GF514J
R 061	616-02-24002	RES,240K 5% 1/4W	1	EA	ALLEN BRAD	RC07GF244J
R 062	616-02-24002	RES,240K 5% 1/4W	1	EA	ALLEN BRAD	RC07GF244J
R 063	616-02-12002	RES,120K 5% 1/4W	1	EA	ALLEN BRAD	RC07GF124J
R 064	616-02-12002	RES,120K 5% 1/4W	1	EA	ALLEN BRAD	RC07GF124J
R 065	605-09-63400	RES. 6.34K 1% 1/8W	1	EA	FWSI	625
R 066	605-09-28000	RES. 2.8K 1% 1/8W	1	EA	FWSI	625
R 067	605-09-78700	RES. 7.87K 1% 1/8W	1	EA	FWSI	625
R 068	605-09-10001	RES. 10.0K 1% 1/8W	1	EA	FWSI	625
R 069	616-02-05109	RES,51 OHM 5% 1/4W	1	EA	ALLEN BRAD	RC07GF510J
R 070	616-02-33000	RES,3.3K 5% 1/4W	1	EA	ALLEN BRAD	RC07GF332J
R 071	616-02-02209	RES,22 OHM 5% 1/4W	1	EA	ALLEN BRAD	RC07GF220J
R 074	616-02-01009	RES,10 OHM 5% 1/4W	1	EA	ALLEN BRAD	RC07GF100J
R 075	616-02-01009	RES,10 OHM 5% 1/4W	1	EA	ALLEN BRAD	RC07GF100J
TP001	143-98-00017	JACK,TEST PT,PW TYPE,RED	1	EA	AMP INC.	3-582340-2
TP002	143-98-00017	JACK,TEST PT,PW TYPE,RED	1	EA	AMP INC.	3-582340-2

(CONTINUED)

PARTS LIST: 17393 MFR. NAME: FWSI PARENT STK. CONT. NO.: 205-89-00722

DESCRIPTION: PWA,BPIF SECTION 2 UM: EA ECO NO.: 0401432 ENG. REV.: XB

4142-04

ITEM NO.	COMPONENT STK. CONT. NO.	DESCRIPTION	QUANTITY	UM	MFR. NAME	MFR. PART/ASSY. NO.
Z 001	046-89-00009	IC,ASSY,FOLLOWER,NPN	1	EA	FWSI	12181
Z 002	046-89-00010	IC,ASSY,FOLLOWER,PNP	1	EA	FWSI	12182
?C 001	304-08-03009	CAP. 30PF .5PF 500V	1	EA	FWSI	600
?C 002	304-01-00609	CAP. 6PF .5PF 500V	1	EA	FWSI	600
?C 005	304-01-00209	CAP. 2PF .5PF 500V	1	EA	FWSI	600
?C 006	304-01-00209	CAP. 2PF .5PF 500V	1	EA	FWSI	600
?C 008	304-20-15009	CAP. 150PF 1% 500V	1	EA	FWSI	600
?C 012	304-01-00909	CAP., 9PF .5PF 500V	1	EA	FWSI	600
?C 013	304-01-00409	CAP. 4PF .5PF 500V	1	EA	FWSI	600
?C 014	304-01-00909	CAP., 9PF .5PF 500V	1	EA	FWSI	600
?C 015	304-01-00609	CAP. 6PF .5PF 500V	1	EA	FWSI	600
?C 016	304-08-02609	CAP., 26PF .5PF 500V	1	EA	FWSI	600
?C 017	304-01-00409	CAP. 4PF .5PF 500V	1	EA	FWSI	600
?C 018	304-01-00409	CAP. 4PF .5PF 500V	1	EA	FWSI	600
?C 019	304-01-00509	CAP. 5PF .5PF 500V	1	EA	FWSI	600
?C 020	304-01-00409	CAP. 4PF .5PF 500V	1	EA	FWSI	600
?C 021	304-01-00309	CAP. 3PF .5PF 500V	1	EA	FWSI	600
?C 024	304-01-00409	CAP. 4PF .5PF 500V	1	EA	FWSI	600
?C 025	304-01-00609	CAP. 6PF .5PF 500V	1	EA	FWSI	600
?C 028	304-01-00409	CAP. 4PF .5PF 500V	1	EA	FWSI	600
?C 029	304-01-00409	CAP. 4PF .5PF 500V	1	EA	FWSI	600
?C 030	304-20-12009	CAP. 120PF 1% 500V	1	EA	FWSI	600
?C 031	304-20-10009	CAP. 100PF 1% 500V	1	EA	FWSI	600
?C 032	304-20-13009	CAP. 130PF 1% 500V	1	EA	FWSI	600
?C 034	304-13-06109	CAP. 61PF 1% 500V	1	EA	FWSI	600
?C 038	304-20-11009	CAP. 110PF 1% 500V	1	EA	FWSI	600
?C 041	305-20-25000	CAP. 2500PF 1% 500V	1	EA	FWSI	600
?C 042	304-20-09109	CAP. 91PF 1% 500V	1	EA	FWSI	600
?C 045	305-20-15200	CAP. 1520PF 1% 500V	1	EA	FWSI	600
?C 046	304-20-11009	CAP. 110PF 1% 500V	1	EA	FWSI	600
?C 054	304-01-00609	CAP. 6PF .5PF 500V	1	EA	FWSI	600
?R 049	605-09-61901	RES. 61.9K 1% 1/8W	1	EA	FWSI	625
?R 072	616-02-24001	RES,24K 5% 1/4W	1	EA	ALLEN BRAD	RC07GF243J
REF001	905-01-00543	SCHEMATIC,PWA,BPIF SECT 2	AR	EA	FWSI	17391
REF002	905-04-00001	SPEC,COMPONENT SPACING	AR	EA	FWSI	9500

(END OF LIST)

PARTS LIST: 17402 MFR. NAME: FWSI PARENT STK. CONT. NO.: 205-89-00723

DESCRIPTION: PWA,TAPE SPEED COMPEN UM: EA ECO NO.: RC00001 ENG. REV.: U#
4142-86

ITEM NO.	COMPONENT STK. CONT. NO.	DESCRIPTION	QUANTITY	UM	MFR. NAME	MFR. PART/ASSY. NO.
001	204-99-00510	PWB,TSC CARD	1	EA	FWSI	17401
002	299-99-00007	EJCTR,CARD,.062BD,POSN7	2	EA	FWSI	6477-6
003	276-99-00008	WIRE,#22,BUSS,SOLID	1	FT	FWSI	619-22
004	255-99-00003	TERM.,SOLDER	9	EA	FWSI	3334-2
005	255-98-00033	TERM,STDF,NON-INSUL,SWAGE	2	EA	CTC/MML	160-2085-02-05-00
C 001	337-14-68003	CAP. 6.8MF 10% 35V	1	EA	FWSI	601
C 002	337-14-68003	CAP. 6.8MF 10% 35V	1	EA	FWSI	601
C 003	707-01-62002	CAP., .620MF 1% 50V	1	EA	FWSI	904
C 004	707-01-62001	CAP., .0620MF 1% 50V	1	EA	FWSI	904
C 005	305-41-56000	CAP.,5600PF 1% 300V	1	EA	FWSI	600
C 006	304-20-50009	CAP. 500PF 1% 500V	1	EA	FWSI	600
C 007	337-14-68003	CAP. 6.8MF 10% 35V	1	EA	FWSI	601
C 008	337-14-68003	CAP. 6.8MF 10% 35V	1	EA	FWSI	601
C 009	337-14-68003	CAP. 6.8MF 10% 35V	1	EA	FWSI	601
C 010	337-14-68003	CAP. 6.8MF 10% 35V	1	EA	FWSI	601
C 011	337-14-68003	CAP. 6.8MF 10% 35V	1	EA	FWSI	601
C 012	304-13-06809	CAP. 68PF 1% 500V	1	EA	FWSI	600
C 013	304-01-01009	CAP. 10PF .5PF 500V	1	EA	FWSI	600
C 014	301-13-10002	CAP,CR , 50V .100 UF 20%	1	EA	ERIE/MML	8131-050-651-104M
C 015	301-13-10002	CAP,CR , 50V .100 UF 20%	1	EA	ERIE/MML	8131-050-651-104M
C 016	304-00-00000	CAP,*TVAR*	AR	EA	FWSI	00000
CR001	088-10-41480	DIODE,SW,75V/5UA,4NS/10MA	1	EA	CODI/MML	1N4148
CR002	088-10-41480	DIODE,SW,75V/5UA,4NS/10MA	1	EA	CODI/MML	1N4148
CR003	088-10-41480	DIODE,SW,75V/5UA,4NS/10MA	1	EA	CODI/MML	1N4148
CR004	088-10-41480	DIODE,SW,75V/5UA,4NS/10MA	1	EA	CODI/MML	1N4148
CR005	088-10-41480	DIODE,SW,75V/5UA,4NS/10MA	1	EA	CODI/MML	1N4148
CR006	088-10-41480	DIODE,SW,75V/5UA,4NS/10MA	1	EA	CODI/MML	1N4148
CR007	088-10-41480	DIODE,SW,75V/5UA,4NS/10MA	1	EA	CODI/MML	1N4148
CR008	088-10-41480	DIODE,SW,75V/5UA,4NS/10MA	1	EA	CODI/MML	1N4148
CR009	088-10-41480	DIODE,SW,75V/5UA,4NS/10MA	1	EA	CODI/MML	1N4148
CR010	088-10-41480	DIODE,SW,75V/5UA,4NS/10MA	1	EA	CODI/MML	1N4148
CR011	088-10-41480	DIODE,SW,75V/5UA,4NS/10MA	1	EA	CODI/MML	1N4148
CR012	088-10-41480	DIODE,SW,75V/5UA,4NS/10MA	1	EA	CODI/MML	1N4148
CR013	088-10-41480	DIODE,SW,75V/5UA,4NS/10MA	1	EA	CODI/MML	1N4148
CR014	088-10-41480	DIODE,SW,75V/5UA,4NS/10MA	1	EA	CODI/MML	1N4148
CR015	088-10-41480	DIODE,SW,75V/5UA,4NS/10MA	1	EA	CODI/MML	1N4148
CR016	088-10-41480	DIODE,SW,75V/5UA,4NS/10MA	1	EA	CODI/MML	1N4148
CR017	088-10-41480	DIODE,SW,75V/5UA,4NS/10MA	1	EA	CODI/MML	1N4148
CR018	088-10-41480	DIODE,SW,75V/5UA,4NS/10MA	1	EA	CODI/MML	1N4148
CR019	088-10-41480	DIODE,SW,75V/5UA,4NS/10MA	1	EA	CODI/MML	1N4148
CR021	088-10-41480	DIODE,SW,75V/5UA,4NS/10MA	1	EA	CODI/MML	1N4148

CONTINUED

PARTS LIST: 17402 MFR. NAME: FWSI PARENT STK. CONT. NO.: 205-89-00723

DESCRIPTION: PWA,TAPE SPEED COMPEN UM: EA ECO NO.: RC00001 ENG. REV.: U#
4142-86

ITEM NO.	COMPONENT STK. CONT. NO.	DESCRIPTION	QUANTITY	UM	MFR. NAME	MFR. PART/ASSY. NO.
CR022	088-10-41480	DIODE,SW,75V/5UA,4NS/10MA	1	EA	CODI/MML	1N4148
CR023	088-10-41480	DIODE,SW,75V/5UA,4NS/10MA	1	EA	CODI/MML	1N4148
K 001	219-99-00027	RELAY,1 FORM A,GOLD CONT	1	EA	FWSI/MML	28531-20
K 002	219-99-00027	RELAY,1 FORM A,GOLD CONT	1	EA	FWSI/MML	28531-20
K 003	219-99-00027	RELAY,1 FORM A,GOLD CONT	1	EA	FWSI/MML	28531-20
K 004	219-99-00027	RELAY,1 FORM A,GOLD CONT	1	EA	FWSI/MML	28531-20
K 005	219-99-00027	RELAY,1 FORM A,GOLD CONT	1	EA	FWSI/MML	28531-20
K 006	219-99-00027	RELAY,1 FORM A,GOLD CONT	1	EA	FWSI/MML	28531-20
K 007	219-99-00027	RELAY,1 FORM A,GOLD CONT	1	EA	FWSI/MML	28531-20
K 008	219-99-00027	RELAY,1 FORM A,GOLD CONT	1	EA	FWSI/MML	28531-20
K 009	219-99-00027	RELAY,1 FORM A,GOLD CONT	1	EA	FWSI/MML	28531-20
K 010	219-99-00027	RELAY,1 FORM A,GOLD CONT	1	EA	FWSI/MML	28531-20
K 011	219-99-00027	RELAY,1 FORM A,GOLD CONT	1	EA	FWSI/MML	28531-20
K 012	219-99-00027	RELAY,1 FORM A,GOLD CONT	1	EA	FWSI/MML	28531-20
K 013	219-99-00027	RELAY,1 FORM A,GOLD CONT	1	EA	FWSI/MML	28531-20
K 014	219-98-00083	RELAY,1 FORM A RHOD CONT	1	EA	EAC/MML	RR10-1202
K 015	219-98-00083	RELAY,1 FORM A RHOD CONT	1	EA	EAC/MML	RR10-1202
K 016	219-98-00083	RELAY,1 FORM A RHOD CONT	1	EA	EAC/MML	RR10-1202
K 017	219-99-00027	RELAY,1 FORM A,GOLD CONT	1	EA	FWSI/MML	28531-20
K 018	219-99-00027	RELAY,1 FORM A,GOLD CONT	1	EA	FWSI/MML	28531-20
K 019	219-99-00027	RELAY,1 FORM A,GOLD CONT	1	EA	FWSI/MML	28531-20
K 021	219-99-00027	RELAY,1 FORM A,GOLD CONT	1	EA	FWSI/MML	28531-20
K 022	219-99-00027	RELAY,1 FORM A,GOLD CONT	1	EA	FWSI/MML	28531-20
K 023	219-99-00027	RELAY,1 FORM A,GOLD CONT	1	EA	FWSI/MML	28531-20
R 001	616-02-27001	RES,27K 5% 1/4W	1	EA	ALLEN BRAD	RC07GF273J
R 002	616-02-47001	RES,47K 5% 1/4W	1	EA	ALLEN BRAD	RC07GF473J
R 003	616-02-02209	RES,22 OHM 5% 1/4W	1	EA	ALLEN BRAD	RC07GF220J
R 004	616-02-02209	RES,22 OHM 5% 1/4W	1	EA	ALLEN BRAD	RC07GF220J
R 005	608-09-49901	RES, 49.9K 1% 1/10W	1	EA	EMR	624
R 006	608-09-24901	RES, 24.9K 1% 1/10W	1	EA	FWSI	624
R 007	608-09-12401	RES, 12.4K 1% 1/10W	1	EA	EMR	624
R 008	608-09-61900	RES. 6.19K 1% 1/10W	1	EA	EMR	624
R 009	608-01-49902	RES, 499K 1% 1/10W 100 PP	1	EA	FWSI	624
R 010	608-09-24902	RES, 249.0K 1% 1/10W	1	EA	EMR	624
R 011	608-09-12402	RES, 124.0K 1% 1/10W	1	EA	FWSI	624
R 012	608-09-61901	RES, 61.9K 1% 1/10W	1	EA	FWSI	624
R 013	616-02-51003	RES,5.1 MEG 5% 1/4W	1	EA	ALLEN BRAD	RC07GF515J
R 014	616-02-24003	RES,2.4 MEG 5% 1/4W	1	EA	ALLEN BRAD	RC07GF245J
R 015	616-02-12003	RES,1.2 MEG 5% 1/4W	1	EA	ALLEN BRAD	RC07GF125J
R 016	616-02-62002	RES,620K 5% 1/4W	1	EA	ALLEN BRAD	RC07GF624J
R 017	608-09-49900	RES. 4.99K 1% 1/10W	1	EA	FWSI	624

CONTINUED

PARTS LIST: 17402 MFR. NAME: FWSI PARENT STK. CONT. NO.: 205-89-00723

DESCRIPTION: PWA,TAPE SPEED COMPEN UM: EA ECO NO.: RC00001 ENG. REV.: U#
4142-86

ITEM NO.	COMPONENT STK. CONT. NO.	DESCRIPTION	QUANTITY	UM	MFR. NAME	MFR. PART/ASSY. NO.
R 018	616-02-02209	RES,22 OHM 5% 1/4W	1	EA	ALLEN BRAD	RC07GF220J
R 019	616-02-02209	RES,22 OHM 5% 1/4W	1	EA	ALLEN BRAD	RC07GF220J
R 020	608-09-10001	RES. 10K 1% 1/10W	1	EA	FWSI	624
R 021	616-02-02209	RES,22 OHM 5% 1/4W	1	EA	ALLEN BRAD	RC07GF220J
R 022	616-02-02209	RES,22 OHM 5% 1/4W	1	EA	ALLEN BRAD	RC07GF220J
R 023	608-09-57609	RES, 576.0 OHM 1% 1/10W	1	EA	FWSI	624
R 024	608-09-15401	RES, 15.4K 1% 1/10W	1	EA	EMR	624
R 025	608-09-33201	RES, 33.2K 1% 1/10W	1	EA	FWSI	624
R 027	608-09-41201	RES, 41.2K 1% 1/10W	1	EA	FWSI	624
R 031	201-98-00063	POT,TRMR, 20 K 10% .5W	1	EA	BECK/MML	62PR20K
R 032	201-98-00063	POT,TRMR, 20 K 10% .5W	1	EA	BECK/MML	62PR20K
R 033	201-98-00063	POT,TRMR, 20 K 10% .5W	1	EA	BECK/MML	62PR20K
R 034	201-98-00063	POT,TRMR, 20 K 10% .5W	1	EA	BECK/MML	62PR20K
R 035	608-01-10000	RES, 1.0K 1% 1/10W	1	EA	EMR	624
R 036	608-01-90909	RES. 909 OHMS 1% 1/10W	1	EA	FWSI	624
R 037	201-98-00062	POT,TRMR,200 OHM 10% .5W	1	EA	BECK/MML	62PR200
R 038	608-09-49909	RES, 499.0 OHM 1% 1/10W	1	EA	FWSI	624
R 039	201-98-00165	POT,TRMR,1.0 MEG 20% .5W	1	EA	BECK/MML	62PR1MEG
R 040	616-02-39003	RES,3.9 MEG 5% 1/4W	1	EA	ALLEN BRAD	RC07GF395J
R 041	616-02-01009	RES,10 OHM 5% 1/4W	1	EA	ALLEN BRAD	RC07GF100J
R 042	616-02-01009	RES,10 OHM 5% 1/4W	1	EA	ALLEN BRAD	RC07GF100J
Z 001	046-89-00010	IC,ASSY,FOLLOWER,PNP	1	EA	FWSI	12182
Z 002	046-89-00032	IC,ASSY,FOLLOWER,NPN	1	EA	FWSI	12181-2
Z 003	046-89-00032	IC,ASSY,FOLLOWER,NPN	1	EA	FWSI	12181-2
Z 004	046-34-00004	IC,LIN AMPL,OPNL	1	EA	NSC/MML	LM301AH
REF001	905-01-00544	SCHEMATIC,PWA	AR	EA	FWSI	17400
REF002	905-04-00002	SPEC,COMPONENT SPACING	AR	EA	FWSI	9500-1
REF003	204-89-00284	PWB,TAPE SP COMPEN CARD	AR	EA	FWSI	17401

END OF LIST

PARTS LIST: 17396 MFR. NAME: FWSI PARENT STK. CONT. NO.: 205-89-00710

DESCRIPTION: PWA,LMTR,DET,SINGLE POLE 4142,4143 UM: EA ECO NO.: 0401295 ENG. REV.: AH

ITEM NO.	COMPONENT STK. CONT. NO.	DESCRIPTION	QUANTITY	UM	MFR. NAME	MFR. PART/ASSY. NO.
001	204-89-00279	PWB,LMTR, DET SINGLE POLE	1	EA	FWSI	17395
002	189-98-00004	PAD,XSTR 4 PIN*USE OPTL*	13	EA	DEL BLINN	100-000-NY
003	299-99-00008	EJCTR,CARD,.062BD,POSN8	2	EA	FWSI	6477-7
004	189-98-00016	PAD,XSTR,TO-5 8PIN,.075H	2	EA	MILTON ROSS	10249-N
005	229-02-00065	SCREW,2-56X1/4 PAN HD	2	EA	PRCMT OPTION	MS51957-3
006	273-02-00003	WASHER,#2, FLT ST STL	2	EA	PRCMT OPTION	MS15795-802
007	273-02-00024	WASHER,#2,INT TOOTH	2	EA	PRCMT OPTION	MS35333-69
013	276-99-00008	WIRE,#22,BUSS,SOLID	AR	FT	FWSI	619-22
014	268-02-00039	TUBING,#22,EXTR TEF,CLEAR	AR	FT	PRCMT OPTION	MIL-I-22129
015	205-89-01014	PWA, DETECTOR SWITCHES	1	EA	FWSI	21777
016	140-99-00136	INS,.25X.75 .062THK G10	1	EA	FWSI	21968
017	060-12-00004	CMPD,SEALANT,GENL PURPOSE	AR	EA	G.E.	RTV-102
018	273-02-00035	WASHER,#2,SPLIT LOCK	AR	EA	PRCMT OPTION	MS35338-134
019	060-12-00004	CMPD,SEALANT,GENL PURPOSE	AR	EA	G.E.	RTV-102
C 001	337-12-22004	CAP., 22MF 10% 15V	1	EA	FWSI	601
C 002	337-12-22004	CAP., 22MF 10% 15V	1	EA	FWSI	601
C 003	301-13-10002	CAP,CR , 50V .100 UF 20%	1	EA	ERIE/MML	8131-050-651-104M
C 004	301-13-10002	CAP,CR , 50V .100 UF 20%	1	EA	ERIE/MML	8131-050-651-104M
C 005	301-13-10002	CAP,CR , 50V .100 UF 20%	1	EA	ERIE/MML	8131-050-651-104M
C 006	301-13-10002	CAP,CR , 50V .100 UF 20%	1	EA	ERIE/MML	8131-050-651-104M
C 007	301-23-27003	CAP,CR , 50V 2.7 UF 20%	1	EA	ERIE/MML	8141-050-651-275M
C 008	301-23-27003	CAP,CR , 50V 2.7 UF 20%	1	EA	ERIE/MML	8141-050-651-275M
C 009	301-13-10002	CAP,CR , 50V .100 UF 20%	1	EA	ERIE/MML	8131-050-651-104M
C 010	301-13-10002	CAP,CR , 50V .100 UF 20%	1	EA	ERIE/MML	8131-050-651-104M
C 011	301-23-27003	CAP,CR , 50V 2.7 UF 20%	1	EA	ERIE/MML	8141-050-651-275M
C 012	301-23-27003	CAP,CR , 50V 2.7 UF 20%	1	EA	ERIE/MML	8141-050-651-275M
C 013	301-13-10003	CAP,CR , 50V 1.00UF 20%	1	EA	ERIE/MML	8131-050-651-105M
C 014	301-13-10002	CAP,CR , 50V .100 UF 20%	1	EA	ERIE/MML	8131-050-651-104M
C 015	301-13-10002	CAP,CR , 50V .100 UF 20%	1	EA	ERIE/MML	8131-050-651-104M
C 016	337-12-22004	CAP., 22MF 10% 15V	1	EA	FWSI	601
C 017	301-13-10002	CAP,CR , 50V .100 UF 20%	1	EA	ERIE/MML	8131-050-651-104M
C 018	301-13-10002	CAP,CR , 50V .100 UF 20%	1	EA	ERIE/MML	8131-050-651-104M
C 019	339-13-10005	CAP, 100MF 10% 20V D CASE	1	EA	FWSI	601
C 020	339-13-10005	CAP, 100MF 10% 20V D CASE	1	EA	FWSI	601
C 021	301-13-10002	CAP,CR , 50V .100 UF 20%	1	EA	ERIE/MML	8131-050-651-104M
C 022	301-13-10002	CAP,CR , 50V .100 UF 20%	1	EA	ERIE/MML	8131-050-651-104M
C 023	301-13-10002	CAP,CR , 50V .100 UF 20%	1	EA	ERIE/MML	8131-050-651-104M
C 024	384-05-14001	CAP., .014MF 1% 50V	1	EA	FWSI	949
C 028	304-20-13509	CAP. 135PF 1% 500V	1	EA	FWSI	600
C 030	304-01-01609	CAP. 16PF .5PF 500V	1	EA	FWSI	600
C 031	304-01-01609	CAP. 16PF .5PF 500V	1	EA	FWSI	600

CONTINUED

PARTS LIST: 17396 MFR. NAME: FWSI PARENT STK. CONT. NO.: 205-89-00710

DESCRIPTION: PWA,LMTR,DET,SINGLE POLE 4142,4143 UM: EA ECO NO.: 0401295 ENG. REV.: AH

ITEM NO.	COMPONENT STK. CONT. NO.	DESCRIPTION	QUANTITY	UM	MFR. NAME	MFR. PART/ASSY. NO.
C 032	304-20-13509	CAP. 135PF 1% 500V	1	EA	FWSI	600
C 037	384-05-14001	CAP., .014MF 1% 50V	1	EA	FWSI	949
C 038	304-41-56009	CAP. 560PF 1% 300V	1	EA	FWSI	600
C 039	304-08-04009	CAP. 40PF .5PF 500V	1	EA	FWSI	600
C 040	305-20-50000	CAP. 5000PF 1% 500V	1	EA	FWSI	600
C 041	304-20-36709	CAP. 367PF 1% 500V	1	EA	FWSI	600
C 042	707-02-54001	CAP., .054MF 2% 50V	1	EA	FWSI	904
C 043	305-20-40600	CAP. 4060PF 1% 500V	1	EA	FWSI	600
C 044	336-05-56002	CAP., .56MF 5% 35V	1	EA	FWSI	601
C 046	336-05-82001	CAP, .082UF 5% 35V	1	EA	FWSI	601
C 047	337-05-56003	CAP. 5.6MF 5% 35V	1	EA	FWSI	601
C 049	336-05-39002	CAP. .39MF 5% 35V	1	EA	FWSI	601
C 050	301-13-10003	CAP,CR , 50V 1.00UF 20%	1	EA	ERIE/MML	8131-050-651-105M
C 052	304-13-06809	CAP. 68PF 1% 500V	1	EA	FWSI	600
C 053	304-01-00309	CAP. 3PF .5PF 500V	1	EA	FWSI	600
C 054	301-13-10002	CAP,CR , 50V .100 UF 20%	1	EA	ERIE/MML	8131-050-651-104M
C 055	301-13-10002	CAP,CR , 50V .100 UF 20%	1	EA	ERIE/MML	8131-050-651-104M
C 056	301-13-10003	CAP,CR , 50V 1.00UF 20%	1	EA	ERIE/MML	8131-050-651-105M
C 057	304-13-06809	CAP. 68PF 1% 500V	1	EA	FWSI	600
C 058	304-01-00309	CAP. 3PF .5PF 500V	1	EA	FWSI	600
C 059	301-13-10002	CAP,CR , 50V .100 UF 20%	1	EA	ERIE/MML	8131-050-651-104M
C 060	301-13-10002	CAP,CR , 50V .100 UF 20%	1	EA	ERIE/MML	8131-050-651-104M
C 061	337-14-68003	CAP. 6.8MF 10% 35V	1	EA	FWSI	601
C 062	301-13-10002	CAP,CR , 50V .100 UF 20%	1	EA	ERIE/MML	8131-050-651-104M
CR001	088-10-41480	DIODE,SW,75V/5UA,4NS/10MA	1	EA	CODI/MML	1N4148
CR002	088-10-41480	DIODE,SW,75V/5UA,4NS/10MA	1	EA	CODI/MML	1N4148
CR003	088-10-41480	DIODE,SW,75V/5UA,4NS/10MA	1	EA	CODI/MML	1N4148
CR004	088-10-41480	DIODE,SW,75V/5UA,4NS/10MA	1	EA	CODI/MML	1N4148
CR005	088-10-41480	DIODE,SW,75V/5UA,4NS/10MA	1	EA	CODI/MML	1N4148
CR006	088-10-41480	DIODE,SW,75V/5UA,4NS/10MA	1	EA	CODI/MML	1N4148
CR007	088-10-41480	DIODE,SW,75V/5UA,4NS/10MA	1	EA	CODI/MML	1N4148
CR008	088-10-41480	DIODE,SW,75V/5UA,4NS/10MA	1	EA	CODI/MML	1N4148
CR009	088-10-09420	DIO,REF,11.7V/7.5MA,.005%	1	EA	CODI/MML	1N942,A,B
CR010	088-10-41480	DIODE,SW,75V/5UA,4NS/10MA	1	EA	CODI/MML	1N4148
CR011	088-10-41480	DIODE,SW,75V/5UA,4NS/10MA	1	EA	CODI/MML	1N4148
CR012	088-10-41480	DIODE,SW,75V/5UA,4NS/10MA	1	EA	CODI/MML	1N4148
CR013	088-10-41480	DIODE,SW,75V/5UA,4NS/10MA	1	EA	CODI/MML	1N4148
CR014	088-10-41480	DIODE,SW,75V/5UA,4NS/10MA	1	EA	CODI/MML	1N4148
CR015	088-10-41480	DIODE,SW,75V/5UA,4NS/10MA	1	EA	CODI/MML	1N4148
CR016	088-10-41480	DIODE,SW,75V/5UA,4NS/10MA	1	EA	CODI/MML	1N4148
CR017	088-10-41480	DIODE,SW,75V/5UA,4NS/10MA	1	EA	CODI/MML	1N4148

CONTINUED

PARTS LIST: 17396 MFR. NAME: FWSI PARENT STK. CONT. NO.: 205-89-00710

DESCRIPTION: PWA,LMTR,DET,SINGLE POLE 4142,4143 UM: EA ECO NO.: 0401295 ENG. REV.: AH

ITEM NO.	COMPONENT STK. CONT. NO.	DESCRIPTION	QUANTITY	UM	MFR. NAME	MFR. PART/ASSY. NO.
CR018	088-10-41480	DIODE,SW,75V/5UA,4NS/10MA	1	EA	CODI/MML	1N4148
CR019	088-10-41480	DIODE,SW,75V/5UA,4NS/10MA	1	EA	CODI/MML	1N4148
CR020	088-10-41480	DIODE,SW,75V/5UA,4NS/10MA	1	EA	CODI/MML	1N4148
CR021	088-10-41480	DIODE,SW,75V/5UA,4NS/10MA	1	EA	CODI/MML	1N4148
CR022	088-10-41480	DIODE,SW,75V/5UA,4NS/10MA	1	EA	CODI/MML	1N4148
CR023	088-10-41480	DIODE,SW,75V/5UA,4NS/10MA	1	EA	CODI/MML	1N4148
CR024	088-10-41480	DIODE,SW,75V/5UA,4NS/10MA	1	EA	CODI/MML	1N4148
CR025	088-10-41480	DIODE,SW,75V/5UA,4NS/10MA	1	EA	CODI/MML	1N4148
CR026	088-10-41480	DIODE,SW,75V/5UA,4NS/10MA	1	EA	CODI/MML	1N4148
CR027	088-10-41480	DIODE,SW,75V/5UA,4NS/10MA	1	EA	CODI/MML	1N4148
CR028	088-10-41480	DIODE,SW,75V/5UA,4NS/10MA	1	EA	CODI/MML	1N4148
CR029	088-10-41480	DIODE,SW,75V/5UA,4NS/10MA	1	EA	CODI/MML	1N4148
CR030	088-10-41480	DIODE,SW,75V/5UA,4NS/10MA	1	EA	CODI/MML	1N4148
CR031	088-10-41480	DIODE,SW,75V/5UA,4NS/10MA	1	EA	CODI/MML	1N4148
CR032	088-10-41480	DIODE,SW,75V/5UA,4NS/10MA	1	EA	CODI/MML	1N4148
CR033	088-10-41480	DIODE,SW,75V/5UA,4NS/10MA	1	EA	CODI/MML	1N4148
CR034	088-10-41480	DIODE,SW,75V/5UA,4NS/10MA	1	EA	CODI/MML	1N4148
CR035	088-10-41480	DIODE,SW,75V/5UA,4NS/10MA	1	EA	CODI/MML	1N4148
CR036	088-10-41480	DIODE,SW,75V/5UA,4NS/10MA	1	EA	CODI/MML	1N4148
CR037	088-10-41480	DIODE,SW,75V/5UA,4NS/10MA	1	EA	CODI/MML	1N4148
CR038	088-10-41480	DIODE,SW,75V/5UA,4NS/10MA	1	EA	CODI/MML	1N4148
CR039	088-10-41480	DIODE,SW,75V/5UA,4NS/10MA	1	EA	CODI/MML	1N4148
CR040	088-10-41480	DIODE,SW,75V/5UA,4NS/10MA	1	EA	CODI/MML	1N4148
CR041	088-10-41480	DIODE,SW,75V/5UA,4NS/10MA	1	EA	CODI/MML	1N4148
CR042	088-10-41480	DIODE,SW,75V/5UA,4NS/10MA	1	EA	CODI/MML	1N4148
CR043	088-10-41480	DIODE,SW,75V/5UA,4NS/10MA	1	EA	CODI/MML	1N4148
K 001	219-99-00018	RELAY,2 FORM A,RHOD CONT	1	EA	FWSI/MML	28531-11
K 002	219-99-00018	RELAY,2 FORM A,RHOD CONT	1	EA	FWSI/MML	28531-11
K 003	219-99-00018	RELAY,2 FORM A,RHOD CONT	1	EA	FWSI/MML	28531-11
K 004	219-99-00027	RELAY,1 FORM A,GOLD CONT	1	EA	FWSI/MML	28531-20
K 005	219-99-00027	RELAY,1 FORM A,GOLD CONT	1	EA	FWSI/MML	28531-20
K 006	219-99-00027	RELAY,1 FORM A,GOLD CONT	1	EA	FWSI/MML	28531-20
K 007	219-99-00027	RELAY,1 FORM A,GOLD CONT	1	EA	FWSI/MML	28531-20
K 008	219-99-00027	RELAY,1 FORM A,GOLD CONT	1	EA	FWSI/MML	28531-20
K 009	219-99-00027	RELAY,1 FORM A,GOLD CONT	1	EA	FWSI/MML	28531-20
K 010	219-99-00027	RELAY,1 FORM A,GOLD CONT	1	EA	FWSI/MML	28531-20
K 011	219-99-00027	RELAY,1 FORM A,GOLD CONT	1	EA	FWSI/MML	28531-20
K 012	219-99-00027	RELAY,1 FORM A,GOLD CONT	1	EA	FWSI/MML	28531-20
K 013	219-99-00018	RELAY,2 FORM A,RHOD CONT	1	EA	FWSI/MML	28531-11
K 014	219-99-00018	RELAY,2 FORM A,RHOD CONT	1	EA	FWSI/MML	28531-11
K 015	219-99-00018	RELAY,2 FORM A,RHOD CONT	1	EA	FWSI/MML	28531-11

CONTINUED

PARTS LIST: 17396 MFR. NAME: FWSI PARENT STK. CONT. NO.: 205-89-00710

DESCRIPTION: PWA,LMTR,DET,SINGLE POLE 4142,4143 UM: EA ECO NO.: 0401295 ENG. REV.: AH

ITEM NO.	COMPONENT STK. CONT. NO.	DESCRIPTION	QUANTITY	UM	MFR. NAME	MFR. PART/ASSY. NO.
K 016	219-99-00018	RELAY,2 FORM A,RHOD CONT	1	EA	FWSI/MML	28531-11
K 017	219-99-00027	RELAY,1 FORM A,GOLD CONT	1	EA	FWSI/MML	28531-20
K 018	219-99-00027	RELAY,1 FORM A,GOLD CONT	1	EA	FWSI/MML	28531-20
K 019	219-99-00027	RELAY,1 FORM A,GOLD CONT	1	EA	FWSI/MML	28531-20
K 020	219-99-00027	RELAY,1 FORM A,GOLD CONT	1	EA	FWSI/MML	28531-20
K 021	219-99-00027	RELAY,1 FORM A,GOLD CONT	1	EA	FWSI/MML	28531-20
K 022	219-99-00027	RELAY,1 FORM A,GOLD CONT	1	EA	FWSI/MML	28531-20
K 023	219-99-00027	RELAY,1 FORM A,GOLD CONT	1	EA	FWSI/MML	28531-20
K 024	219-99-00027	RELAY,1 FORM A,GOLD CONT	1	EA	FWSI/MML	28531-20
K 025	219-99-00027	RELAY,1 FORM A,GOLD CONT	1	EA	FWSI/MML	28531-20
K 026	219-99-00027	RELAY,1 FORM A,GOLD CONT	1	EA	FWSI/MML	28531-20
K 027	219-99-00027	RELAY,1 FORM A,GOLD CONT	1	EA	FWSI/MML	28531-20
K 028	219-99-00027	RELAY,1 FORM A,GOLD CONT	1	EA	FWSI/MML	28531-20
K 029	219-99-00027	RELAY,1 FORM A,GOLD CONT	1	EA	FWSI/MML	28531-20
K 030	219-99-00027	RELAY,1 FORM A,GOLD CONT	1	EA	FWSI/MML	28531-20
K 031	219-99-00027	RELAY,1 FORM A,GOLD CONT	1	EA	FWSI/MML	28531-20
K 032	219-99-00027	RELAY,1 FORM A,GOLD CONT	1	EA	FWSI/MML	28531-20
K 033	219-99-00027	RELAY,1 FORM A,GOLD CONT	1	EA	FWSI/MML	28531-20
K 034	219-99-00028	RELAY,2 FORM A,GOLD CONT	1	EA	FWSI/MML	28531-21
K 035	219-99-00019	RELAY,2 FORM C,GOLD CONT	1	EA	FWSI/MML	28531-12
Q 001	263-34-24840	XSTR,NPN,HFE 150 MIN@1MA	1	EA	FCH/MML	2N2484
Q 002	263-34-24840	XSTR,NPN,HFE 150 MIN@1MA	1	EA	FCH/MML	2N2484
Q 003	263-10-39330	XSTR,NPN 30V VHF/UHF AMPL	1	EA	FCH/MML	2N3933
Q 004	263-10-39330	XSTR,NPN 30V VHF/UHF AMPL	1	EA	FCH/MML	2N3933
Q 005	263-10-39330	XSTR,NPN 30V VHF/UHF AMPL	1	EA	FCH/MML	2N3933
Q 006	263-10-39330	XSTR,NPN 30V VHF/UHF AMPL	1	EA	FCH/MML	2N3933
Q 007	263-10-39330	XSTR,NPN 30V VHF/UHF AMPL	1	EA	FCH/MML	2N3933
Q 008	263-10-39330	XSTR,NPN 30V VHF/UHF AMPL	1	EA	FCH/MML	2N3933
Q 009	263-10-39330	XSTR,NPN 30V VHF/UHF AMPL	1	EA	FCH/MML	2N3933
Q 010	263-10-39330	XSTR,NPN 30V VHF/UHF AMPL	1	EA	FCH/MML	2N3933
Q 011	263-10-39330	XSTR,NPN 30V VHF/UHF AMPL	1	EA	FCH/MML	2N3933
Q 012	263-10-39330	XSTR,NPN 30V VHF/UHF AMPL	1	EA	FCH/MML	2N3933
Q 015	263-10-22221	XSTR,NPN 75V,DC/UHF AMPL	1	EA	FCH/MML	2N2222A
R 001	616-02-01009	RES,10 OHM 5% 1/4W	1	EA	ALLEN BRAD	RC07GF100J
R 002	616-02-82000	RES,8.2K 5% 1/4W	1	EA	ALLEN BRAD	RC07GF822J
R 003	616-02-82000	RES,8.2K 5% 1/4W	1	EA	ALLEN BRAD	RC07GF822J
R 004	616-02-10009	RES,100 OHM 5% 1/4W	1	EA	ALLEN BRAD	RC07GF101J
R 005	616-02-56009	RES,560 OHM 5% 1/4W	1	EA	ALLEN BRAD	RC07GF561J
R 006	201-98-00150	POT,TRMR, 10 OHM 20% .5W	1	EA	BECK/MML	62PR10
R 007	616-02-56009	RES,560 OHM 5% 1/4W	1	EA	ALLEN BRAD	RC07GF561J
R 008	616-02-30000	RES,3K 5% 1/4W	1	EA	ALLEN BRAD	RC07GF302J

CONTINUED

PARTS LIST: 17396 MFR. NAME: FWSI PARENT STK. CONT. NO.: 205-89-00710

DESCRIPTION: PWA,LMTR,DET,SINGLE POLE 4142,4143 UM: EA ECO NO.: 0401295 ENG. REV.: AH

ITEM NO.	COMPONENT STK. CONT. NO.	DESCRIPTION	QUANTITY	UM	MFR. NAME	MFR. PART/ASSY. NO.
R 009	616-02-30000	RES,3K 5% 1/4W	1	EA	ALLEN BRAD	RC07GF302J
R 011	616-02-01009	RES,10 OHM 5% 1/4W	1	EA	ALLEN BRAD	RC07GF100J
R 012	616-02-47000	RES,4.7K 5% 1/4W	1	EA	ALLEN BRAD	RC07GF472J
R 013	616-02-47000	RES,4.7K 5% 1/4W	1	EA	ALLEN BRAD	RC07GF472J
R 014	616-02-10009	RES,100 OHM 5% 1/4W	1	EA	ALLEN BRAD	RC07GF101J
R 015	616-02-10001	RES,10K 5% 1/4W	1	EA	ALLEN BRAD	RC07GF103J
R 016	616-02-10009	RES,100 OHM 5% 1/4W	1	EA	ALLEN BRAD	RC07GF101J
R 017	616-02-10001	RES,10K 5% 1/4W	1	EA	ALLEN BRAD	RC07GF103J
R 018	616-02-18000	RES,1.8K 5% 1/4W	1	EA	ALLEN BRAD	RC07GF182J
R 019	616-02-18000	RES,1.8K 5% 1/4W	1	EA	ALLEN BRAD	RC07GF182J
R 020	616-02-01009	RES,10 OHM 5% 1/4W	1	EA	ALLEN BRAD	RC07GF100J
R 021	616-02-12002	RES,120K 5% 1/4W	1	EA	ALLEN BRAD	RC07GF124J
R 022	616-02-10009	RES,100 OHM 5% 1/4W	1	EA	ALLEN BRAD	RC07GF101J
R 023	616-02-15000	RES,1.5K 5% 1/4W	1	EA	ALLEN BRAD	RC07GF152J
R 024	616-02-10009	RES,100 OHM 5% 1/4W	1	EA	ALLEN BRAD	RC07GF101J
R 025	616-02-10001	RES,10K 5% 1/4W	1	EA	ALLEN BRAD	RC07GF103J
R 026	616-02-10009	RES,100 OHM 5% 1/4W	1	EA	ALLEN BRAD	RC07GF101J
R 027	616-02-10001	RES,10K 5% 1/4W	1	EA	ALLEN BRAD	RC07GF103J
R 028	616-02-91009	RES,910 OHM 5% 1/4W	1	EA	ALLEN BRAD	RC07GF911J
R 029	616-02-91009	RES,910 OHM 5% 1/4W	1	EA	ALLEN BRAD	RC07GF911J
R 030	616-02-01009	RES,10 OHM 5% 1/4W	1	EA	ALLEN BRAD	RC07GF100J
R 031	616-02-62009	RES,620 OHM 5% 1/4W	1	EA	ALLEN BRAD	RC07GF621J
R 032	616-02-62009	RES,620 OHM 5% 1/4W	1	EA	ALLEN BRAD	RC07GF621J
R 033	616-02-10009	RES,100 OHM 5% 1/4W	1	EA	ALLEN BRAD	RC07GF101J
R 034	616-02-43009	RES. 430 OHM 5% 1/4W	1	EA	ALLEN BRAD	RC07GF431J
R 035	616-02-10009	RES,100 OHM 5% 1/4W	1	EA	ALLEN BRAD	RC07GF101J
R 036	616-02-91009	RES,910 OHM 5% 1/4W	1	EA	ALLEN BRAD	RC07GF911J
R 037	616-02-91009	RES,910 OHM 5% 1/4W	1	EA	ALLEN BRAD	RC07GF911J
R 038	616-02-01009	RES,10 OHM 5% 1/4W	1	EA	ALLEN BRAD	RC07GF100J
R 039	616-02-01009	RES,10 OHM 5% 1/4W	1	EA	ALLEN BRAD	RC07GF100J
R 040	616-02-10009	RES,100 OHM 5% 1/4W	1	EA	ALLEN BRAD	RC07GF101J
R 041	608-09-90909	RES, 909.0 OHM 1% 1/10W	1	EA	EMR	624
R 042	616-02-56009	RES,560 OHM 5% 1/4W	1	EA	ALLEN BRAD	RC07GF561J
R 043	616-02-10009	RES,100 OHM 5% 1/4W	1	EA	ALLEN BRAD	RC07GF101J
R 045	616-02-10009	RES,100 OHM 5% 1/4W	1	EA	ALLEN BRAD	RC07GF101J
R 047	616-02-56009	RES,560 OHM 5% 1/4W	1	EA	ALLEN BRAD	RC07GF561J
R 048	616-02-10009	RES,100 OHM 5% 1/4W	1	EA	ALLEN BRAD	RC07GF101J
R 049	608-09-90909	RES, 909.0 OHM 1% 1/10W	1	EA	EMR	624
R 052	608-09-10000	RES. 1K 1% 1/10W	1	EA	FWSI	624
R 053	616-02-15009	RES,150 OHM 5% 1/4W	1	EA	ALLEN BRAD	RC07GF151J
R 054	608-09-10000	RES. 1K 1% 1/10W	1	EA	FWSI	624

CONTINUED

PARTS LIST: 17396 MFR. NAME: FWSI PARENT STK. CONT. NO.: 205-89-00710

DESCRIPTION: PWA,LMTR,DET,SINGLE POLE 4142,4143 UM: EA ECO NO.: 0401295 ENG. REV.: AH

ITEM NO.	COMPONENT STK. CONT. NO.	DESCRIPTION	QUANTITY	UM	MFR. NAME	MFR. PART/ASSY. NO.
R 056	608-09-75009	RES, 750.0 OHM 1% 1/10W	1	EA	FWSI	624
R 057	608-09-75009	RES, 750.0 OHM 1% 1/10W	1	EA	FWSI	624
R 060	616-02-39009	RES,390 OHM 5% 1/4W	1	EA	ALLEN BRAD	RC07GF391J
R 061	616-02-47009	RES,470 OHM 5% 1/4W	1	EA	ALLEN BRAD	RC07GF471J
R 062	608-09-24900	RES, 2.49K 1% 1/10W	1	EA	FWSI	624
R 063	608-09-49900	RES. 4.99K 1% 1/10W	1	EA	FWSI	624
R 064	608-09-10001	RES. 10K 1% 1/10W	1	EA	FWSI	624
R 065	608-09-20001	RES. 20K 1% 1/10W	1	EA	FWSI	624
R 066	608-09-24909	RES, 249.0 OHM 1% 1/10W	1	EA	FWSI	624
R 067	608-09-49909	RES, 499.0 OHM 1% 1/10W	1	EA	FWSI	624
R 068	608-09-10000	RES. 1K 1% 1/10W	1	EA	FWSI	624
R 069	608-09-20000	RES. 2.0K 1% 1/10W	1	EA	FWSI	624
R 070	608-09-11802	RES, 118.0K 1% 1/10W	1	EA	EMR	624
R 071	201-98-00063	POT,TRMR, 20 K 10% .5W	1	EA	BECK/MML	62PR20K
R 072	608-09-11802	RES, 118.0K 1% 1/10W	1	EA	EMR	624
R 073	616-02-20009	RES,200 OHM 5% 1/4W	1	EA	ALLEN BRAD	RC07GF201J
R 074	608-09-10002	RES, 100.0K 1% 1/10W	1	EA	FWSI	624
R 075	608-09-20002	RES, 200.0K 1% 1/10W	1	EA	FWSI	624
R 076	608-09-40202	RES, 402.0K 1% 1/10W	1	EA	FWSI	624
R 077	608-01-80602	RES, 806K 1% 1/10W 100 PP	1	EA	EMR	624
R 079	608-09-10201	RES, 10.2K 1% 1/10W	1	EA	FWSI	624
R 081	608-09-20501	RES. 20.5K 1% 1/10W	1	EA	FWSI	624
R 083	608-09-41201	RES, 41.2K 1% 1/10W	1	EA	FWSI	624
R 085	608-09-80601	RES, 80.6K 1% 1/10W	1	EA	FWSI	624
R 087	608-09-10200	RES, 1.02K 1% 1/10W	1	EA	EMR	624
R 089	608-09-20500	RES. 2.05K 1% 1/10W	1	EA	FWSI	624
R 091	608-09-41200	RES, 4.12K 1% 1/10W	1	EA	EMR	624
R 093	608-09-80600	RES, 8.06K 1% 1/10W	1	EA	EMR	624
R 095	608-09-80609	RES, 806.0 OHM 1% 1/10W	1	EA	FWSI	624
R 096	201-98-00063	POT,TRMR, 20 K 10% .5W	1	EA	BECK/MML	62PR20K
R 098	616-02-01009	RES,10 OHM 5% 1/4W	1	EA	ALLEN BRAD	RC07GF100J
R 099	616-02-01009	RES,10 OHM 5% 1/4W	1	EA	ALLEN BRAD	RC07GF100J
R 100	608-09-00000	RES,*TVAR* 1%,1/10W	AR	EA	FWSI	624
R 102	616-02-20009	RES,200 OHM 5% 1/4W	1	EA	ALLEN BRAD	RC07GF201J
R 103	608-09-23700	RES., 2.37K 1% 1/10W	1	EA	FWSI	624
R 104	608-09-34800	RES, 3.48K 1% 1/10W	1	EA	EMR	624
R 105	608-09-63400	RES, 6.34K 1% 1/10W	1	EA	EMR	624
R 106	608-09-10501	RES, 10.5K 1% 1/10W	1	EA	FWSI	624
R 107	608-09-10501	RES, 10.5K 1% 1/10W	1	EA	FWSI	624
R 109	616-02-01009	RES,10 OHM 5% 1/4W	1	EA	ALLEN BRAD	RC07GF100J
R 110	616-02-01009	RES,10 OHM 5% 1/4W	1	EA	ALLEN BRAD	RC07GF100J

CONTINUED

PARTS LIST: 17396 MFR. NAME: FWSI PARENT STK. CONT. NO.: 205-89-00710

DESCRIPTION: PWA,LMTR,DET,SINGLE POLE UM: EA ECO NO.: 0401295 ENG. REV.: AH
4142,4143

ITEM NO.	COMPONENT STK. CONT. NO.	DESCRIPTION	QUANTITY	UM	MFR. NAME	MFR. PART/ASSY. NO.
R 111	616-02-05609	RES,56 OHM 5% 1/4W	1	EA	ALLEN BRAD	RC07GF560J
R 113	616-02-00000	RES,*TVAR*	AR	EA	FWSI	00000
R 114	616-02-00000	RES,*TVAR*	AR	EA	FWSI	00000
R 115	608-09-64901	RES, 64.9K 1% 1/10W	1	EA	FWSI	624
R 116	608-09-00000	RES,*TVAR* 1%,1/10W	AR	EA	FWSI	624
U 001	046-97-00209	IC,LIN AMPL,OPNL HS SLEW	1	EA	HAS/MML	HA2-2525-5
U 002	046-97-00209	IC,LIN AMPL,OPNL HS SLEW	1	EA	HAS/MML	HA2-2525-5
?C 026	305-20-12600	CAP. 1260PF 1% 500V	1	EA	FWSI	600
?C 035	305-20-12600	CAP. 1260PF 1% 500V	1	EA	FWSI	600
?R 055	608-09-86600	RES, 8.66K 1% 1/10W	1	EA	EMR	624
?R 116	608-09-86600	RES, 8.66K 1% 1/10W	1	EA	EMR	624
REF001	905-01-00539	SCHEMATIC,PWA	AR	EA	FWSI	17394
REF002	905-04-00002	SPEC,COMPONENT SPACING	AR	EA	FWSI	9500-1

END OF LIST

PARTS LIST: 17396-1 MFR. NAME: FWSI PARENT STK. CONT. NO.: 205-89-00718

DESCRIPTION: PWA,LMTR,DET,SINGLE POLE UM: EA ECO NO.: 0401295 ENG. REV.: AF
4142-04

ITEM NO.	COMPONENT STK. CONT. NO.	DESCRIPTION	QUANTITY	UM	MFR. NAME	MFR. PART/ASSY. NO.
001	204-89-00279	PWB,LMTR, DET SINGLE POLE	1	EA	FWSI	17395
003	299-99-00008	EJCTR,CARD,.062BD,POSN8	2	EA	FWSI	6477-7
005	229-02-00065	SCREW,2-56X1/4 PAN HD	2	EA	PRCMT OPTION	MS51957-3
006	273-02-00003	WASHER,#2, FLT ST STL	2	EA	PRCMT OPTION	MS15795-802
007	273-02-00024	WASHER,#2,INT TOOTH	2	EA	PRCMT OPTION	MS35333-69
013	276-99-00008	WIRE,#22,BUSS,SOLID	AR	FT	FWSI	619-22
014	268-02-00039	TUBING,#22,EXTR TEF,CLEAR	AR	FT	PRCMT OPTION	MIL-I-22129
015	205-89-01014	PWA, DETECTOR SWITCHES	1	EA	FWSI	21777
016	140-99-00136	INS,.25X.75 .062THK G10	1	EA	FWSI	21968
017	060-12-00004	CMPD,SEALANT,GENL PURPOSE	AR	EA	G.E.	RTV-102
018	273-02-00035	WASHER,#2,SPLIT LOCK	AR	EA	PRCMT OPTION	MS35338-134
019	060-12-00004	CMPD,SEALANT,GENL PURPOSE	AR	EA	G.E.	RTV-102
020	189-98-00004	PAD,XSTR 4 PIN*USE OPTL*	3	EA	DEL BLINN	100-000-NY
C 001	337-12-22004	CAP., 22MF 10% 15V	1	EA	FWSI	601
C 002	337-12-22004	CAP., 22MF 10% 15V	1	EA	FWSI	601
C 003	301-13-10002	CAP,CR , 50V .100 UF 20%	1	EA	ERIE/MML	8131-050-651-104M
C 004	301-13-10002	CAP,CR , 50V .100 UF 20%	1	EA	ERIE/MML	8131-050-651-104M
C 005	301-13-10002	CAP,CR , 50V .100 UF 20%	1	EA	ERIE/MML	8131-050-651-104M
C 006	301-13-10002	CAP,CR , 50V .100 UF 20%	1	EA	ERIE/MML	8131-050-651-104M
C 007	301-23-27003	CAP,CR , 50V 2.7 UF 20%	1	EA	ERIE/MML	8141-050-651-275M
C 008	301-23-27003	CAP,CR , 50V 2.7 UF 20%	1	EA	ERIE/MML	8141-050-651-275M
C 009	301-13-10002	CAP,CR , 50V .100 UF 20%	1	EA	ERIE/MML	8131-050-651-104M
C 010	301-13-10002	CAP,CR , 50V .100 UF 20%	1	EA	ERIE/MML	8131-050-651-104M
C 011	301-23-27003	CAP,CR , 50V 2.7 UF 20%	1	EA	ERIE/MML	8141-050-651-275M
C 012	301-23-27003	CAP,CR , 50V 2.7 UF 20%	1	EA	ERIE/MML	8141-050-651-275M
C 013	301-13-10003	CAP,CR , 50V 1.00UF 20%	1	EA	ERIE/MML	8131-050-651-105M
C 014	301-13-10002	CAP,CR , 50V .100 UF 20%	1	EA	ERIE/MML	8131-050-651-104M
C 015	301-13-10002	CAP,CR , 50V .100 UF 20%	1	EA	ERIE/MML	8131-050-651-104M
C 016	337-12-22004	CAP., 22MF 10% 15V	1	EA	FWSI	601
C 017	301-13-10002	CAP,CR , 50V .100 UF 20%	1	EA	ERIE/MML	8131-050-651-104M
C 018	301-13-10002	CAP,CR , 50V .100 UF 20%	1	EA	ERIE/MML	8131-050-651-104M
C 019	339-13-10005	CAP, 100MF 10% 20V D CASE	1	EA	FWSI	601
C 020	339-13-10005	CAP, 100MF 10% 20V D CASE	1	EA	FWSI	601
C 021	301-13-10002	CAP,CR , 50V .100 UF 20%	1	EA	ERIE/MML	8131-050-651-104M
C 022	301-13-10002	CAP,CR , 50V .100 UF 20%	1	EA	ERIE/MML	8131-050-651-104M
C 023	301-13-10002	CAP,CR , 50V .100 UF 20%	1	EA	ERIE/MML	8131-050-651-104M
C 024	384-05-14001	CAP., .014MF 1% 50V	1	EA	FWSI	949
C 028	304-20-13509	CAP. 135PF 1% 500V	1	EA	FWSI	600
C 030	304-01-01609	CAP. 16PF .5PF 500V	1	EA	FWSI	600
C 031	304-01-01609	CAP. 16PF .5PF 500V	1	EA	FWSI	600
C 032	304-20-13509	CAP. 135PF 1% 500V	1	EA	FWSI	600

CONTINUED

PARTS LIST: 17396-1 MFR. NAME: FWSI PARENT STK. CONT. NO.: 205-89-00718

DESCRIPTION: PWA,LMTR,DET,SINGLE POLE 4142-04 UM: EA ECO NO.: 0401295 ENG. REV.: AF

ITEM NO.	COMPONENT STK. CONT. NO.	DESCRIPTION	QUANTITY	UM	MFR. NAME	MFR. PART/ASSY. NO.
C 037	384-05-14001	CAP., .014MF 1% 50V	1	EA	FWSI	949
C 038	304-41-53009	CAP. 530PF 1% 300V	1	EA	FWSI	600
C 039	304-20-11509	CAP. 115PF 1% 500V	1	EA	FWSI	600
C 040	305-20-48000	CAP. 4800PF 1% 500V	1	EA	FWSI	600
C 041	305-20-10800	CAP. 1080PF 1% 500V	1	EA	FWSI	600
C 042	707-02-53001	CAP., .053MF 2% 50V	1	EA	FWSI	904
C 043	707-02-11801	CAP.,.0118MF,2% 50V	1	EA	FWSI	904
C 044	336-05-47002	CAP. .47MF 5% 35V	1	EA	FWSI	601
C 045	336-05-56001	CAP, .056UF 5% 35V	1	EA	FWSI	601
C 046	336-05-12002	CAP, .12UF 5% 35V	1	EA	FWSI	601
C 047	337-05-47003	CAP. 4.7MF 5% 35V	1	EA	FWSI	601
C 048	336-05-56002	CAP., .56MF 5% 35V	1	EA	FWSI	601
C 049	336-04-12003	CAP. 1.2MF 5% 20V	1	EA	FWSI	601
C 050	301-13-10003	CAP,CR , 50V 1.00UF 20%	1	EA	ERIE/MML	8131-050-651-105M
C 052	304-13-06809	CAP. 68PF 1% 500V	1	EA	FWSI	600
C 053	304-01-00309	CAP. 3PF .5PF 500V	1	EA	FWSI	600
C 054	301-13-10002	CAP,CR , 50V .100 UF 20%	1	EA	ERIE/MML	8131-050-651-104M
C 055	301-13-10002	CAP,CR , 50V .100 UF 20%	1	EA	ERIE/MML	8131-050-651-104M
C 056	301-13-10003	CAP,CR , 50V 1.00UF 20%	1	EA	ERIE/MML	8131-050-651-105M
C 057	304-13-06809	CAP. 68PF 1% 500V	1	EA	FWSI	600
C 058	304-01-00309	CAP. 3PF .5PF 500V	1	EA	FWSI	600
C 059	301-13-10002	CAP,CR , 50V .100 UF 20%	1	EA	ERIE/MML	8131-050-651-104M
C 060	301-13-10002	CAP,CR , 50V .100 UF 20%	1	EA	ERIE/MML	8131-050-651-104M
C 061	337-14-68003	CAP. 6.8MF 10% 35V	1	EA	FWSI	601
C 062	301-13-10002	CAP,CR , 50V .100 UF 20%	1	EA	ERIE/MML	8131-050-651-104M
CR001	088-10-41480	DIODE,SW,75V/5UA,4NS/10MA	1	EA	CODI/MML	1N4148
CR002	088-10-41480	DIODE,SW,75V/5UA,4NS/10MA	1	EA	CODI/MML	1N4148
CR003	088-10-41480	DIODE,SW,75V/5UA,4NS/10MA	1	EA	CODI/MML	1N4148
CR004	088-10-41480	DIODE,SW,75V/5UA,4NS/10MA	1	EA	CODI/MML	1N4148
CR005	088-10-41480	DIODE,SW,75V/5UA,4NS/10MA	1	EA	CODI/MML	1N4148
CR006	088-10-41480	DIODE,SW,75V/5UA,4NS/10MA	1	EA	CODI/MML	1N4148
CR007	088-10-41480	DIODE,SW,75V/5UA,4NS/10MA	1	EA	CODI/MML	1N4148
CR008	088-10-41480	DIODE,SW,75V/5UA,4NS/10MA	1	EA	CODI/MML	1N4148
CR009	088-10-09420	DIO,REF,11.7V/7.5MA,.005%	1	EA	CODI/MML	1N942,A,B
CR010	088-10-41480	DIODE,SW,75V/5UA,4NS/10MA	1	EA	CODI/MML	1N4148
CR011	088-10-41480	DIODE,SW,75V/5UA,4NS/10MA	1	EA	CODI/MML	1N4148
CR012	088-10-41480	DIODE,SW,75V/5UA,4NS/10MA	1	EA	CODI/MML	1N4148
CR013	088-10-41480	DIODE,SW,75V/5UA,4NS/10MA	1	EA	CODI/MML	1N4148
CR014	088-10-41480	DIODE,SW,75V/5UA,4NS/10MA	1	EA	CODI/MML	1N4148
CR015	088-10-41480	DIODE,SW,75V/5UA,4NS/10MA	1	EA	CODI/MML	1N4148
CR016	088-10-41480	DIODE,SW,75V/5UA,4NS/10MA	1	EA	CODI/MML	1N4148

CONTINUED

PARTS LIST: 17396-1 MFR. NAME: FWSI PARENT STK. CONT. NO.: 205-89-00718

DESCRIPTION: PWA,LMTR,DET,SINGLE POLE UM: EA ECO NO.: 0401295 ENG. REV.: AF
4142-04

ITEM NO.	COMPONENT STK. CONT. NO.	DESCRIPTION	QUANTITY	UM	MFR. NAME	MFR. PART/ASSY. NO.
CR017	088-10-41480	DIODE,SW,75V/5UA,4NS/10MA	1	EA	CODI/MML	1N4148
CR018	088-10-41480	DIODE,SW,75V/5UA,4NS/10MA	1	EA	CODI/MML	1N4148
CR019	088-10-41480	DIODE,SW,75V/5UA,4NS/10MA	1	EA	CODI/MML	1N4148
CR020	088-10-41480	DIODE,SW,75V/5UA,4NS/10MA	1	EA	CODI/MML	1N4148
CR021	088-10-41480	DIODE,SW,75V/5UA,4NS/10MA	1	EA	CODI/MML	1N4148
CR022	088-10-41480	DIODE,SW,75V/5UA,4NS/10MA	1	EA	CODI/MML	1N4148
CR023	088-10-41480	DIODE,SW,75V/5UA,4NS/10MA	1	EA	CODI/MML	1N4148
CR024	088-10-41480	DIODE,SW,75V/5UA,4NS/10MA	1	EA	CODI/MML	1N4148
CR025	088-10-41480	DIODE,SW,75V/5UA,4NS/10MA	1	EA	CODI/MML	1N4148
CR026	088-10-41480	DIODE,SW,75V/5UA,4NS/10MA	1	EA	CODI/MML	1N4148
CR027	088-10-41480	DIODE,SW,75V/5UA,4NS/10MA	1	EA	CODI/MML	1N4148
CR028	088-10-41480	DIODE,SW,75V/5UA,4NS/10MA	1	EA	CODI/MML	1N4148
CR029	088-10-41480	DIODE,SW,75V/5UA,4NS/10MA	1	EA	CODI/MML	1N4148
CR030	088-10-41480	DIODE,SW,75V/5UA,4NS/10MA	1	EA	CODI/MML	1N4148
CR031	088-10-41480	DIODE,SW,75V/5UA,4NS/10MA	1	EA	CODI/MML	1N4148
CR032	088-10-41480	DIODE,SW,75V/5UA,4NS/10MA	1	EA	CODI/MML	1N4148
CR033	088-10-41480	DIODE,SW,75V/5UA,4NS/10MA	1	EA	CODI/MML	1N4148
CR034	088-10-41480	DIODE,SW,75V/5UA,4NS/10MA	1	EA	CODI/MML	1N4148
CR035	088-10-41480	DIODE,SW,75V/5UA,4NS/10MA	1	EA	CODI/MML	1N4148
CR036	088-10-41480	DIODE,SW,75V/5UA,4NS/10MA	1	EA	CODI/MML	1N4148
CR037	088-10-41480	DIODE,SW,75V/5UA,4NS/10MA	1	EA	CODI/MML	1N4148
CR038	088-10-41480	DIODE,SW,75V/5UA,4NS/10MA	1	EA	CODI/MML	1N4148
CR039	088-10-41480	DIODE,SW,75V/5UA,4NS/10MA	1	EA	CODI/MML	1N4148
CR040	088-10-41480	DIODE,SW,75V/5UA,4NS/10MA	1	EA	CODI/MML	1N4148
CR041	088-10-41480	DIODE,SW,75V/5UA,4NS/10MA	1	EA	CODI/MML	1N4148
CR042	088-10-41480	DIODE,SW,75V/5UA,4NS/10MA	1	EA	CODI/MML	1N4148
CR043	088-10-41480	DIODE,SW,75V/5UA,4NS/10MA	1	EA	CODI/MML	1N4148
K 001	219-99-00018	RELAY,2 FORM A,RHOD CONT	1	EA	FWSI/MML	28531-11
K 002	219-99-00018	RELAY,2 FORM A,RHOD CONT	1	EA	FWSI/MML	28531-11
K 003	219-99-00018	RELAY,2 FORM A,RHOD CONT	1	EA	FWSI/MML	28531-11
K 004	219-99-00027	RELAY,1 FORM A,GOLD CONT	1	EA	FWSI/MML	28531-20
K 005	219-99-00027	RELAY,1 FORM A,GOLD CONT	1	EA	FWSI/MML	28531-20
K 006	219-99-00027	RELAY,1 FORM A,GOLD CONT	1	EA	FWSI/MML	28531-20
K 007	219-99-00027	RELAY,1 FORM A,GOLD CONT	1	EA	FWSI/MML	28531-20
K 008	219-99-00027	RELAY,1 FORM A,GOLD CONT	1	EA	FWSI/MML	28531-20
K 009	219-99-00027	RELAY,1 FORM A,GOLD CONT	1	EA	FWSI/MML	28531-20
K 010	219-99-00027	RELAY,1 FORM A,GOLD CONT	1	EA	FWSI/MML	28531-20
K 011	219-99-00027	RELAY,1 FORM A,GOLD CONT	1	EA	FWSI/MML	28531-20
K 012	219-99-00027	RELAY,1 FORM A,GOLD CONT	1	EA	FWSI/MML	28531-20
K 013	219-99-00018	RELAY,2 FORM A,RHOD CONT	1	EA	FWSI/MML	28531-11
K 014	219-99-00018	RELAY,2 FORM A,RHOD CONT	1	EA	FWSI/MML	28531-11

CONTINUED

PARTS LIST: 17396-1 MFR. NAME: FWSI PARENT STK. CONT. NO.: 205-89-00718

DESCRIPTION: PWA,LMTR,DET,SINGLE POLE UM: EA ECO NO.: 0401295 ENG. REV.: AF
4142-04

ITEM NO.	COMPONENT STK. CONT. NO.	DESCRIPTION	QUANTITY	UM	MFR. NAME	MFR. PART/ASSY. NO.
K 015	219-99-00018	RELAY,2 FORM A,RHOD CONT	1	EA	FWSI/MML	28531-11
K 016	219-99-00018	RELAY,2 FORM A,RHOD CONT	1	EA	FWSI/MML	28531-11
K 017	219-99-00027	RELAY,1 FORM A,GOLD CONT	1	EA	FWSI/MML	28531-20
K 018	219-99-00027	RELAY,1 FORM A,GOLD CONT	1	EA	FWSI/MML	28531-20
K 019	219-99-00027	RELAY,1 FORM A,GOLD CONT	1	EA	FWSI/MML	28531-20
K 020	219-99-00027	RELAY,1 FORM A,GOLD CONT	1	EA	FWSI/MML	28531-20
K 021	219-99-00027	RELAY,1 FORM A,GOLD CONT	1	EA	FWSI/MML	28531-20
K 022	219-99-00027	RELAY,1 FORM A,GOLD CONT	1	EA	FWSI/MML	28531-20
K 023	219-99-00027	RELAY,1 FORM A,GOLD CONT	1	EA	FWSI/MML	28531-20
K 024	219-99-00027	RELAY,1 FORM A,GOLD CONT	1	EA	FWSI/MML	28531-20
K 025	219-99-00027	RELAY,1 FORM A,GOLD CONT	1	EA	FWSI/MML	28531-20
K 026	219-99-00027	RELAY,1 FORM A,GOLD CONT	1	EA	FWSI/MML	28531-20
K 027	219-99-00027	RELAY,1 FORM A,GOLD CONT	1	EA	FWSI/MML	28531-20
K 028	219-99-00027	RELAY,1 FORM A,GOLD CONT	1	EA	FWSI/MML	28531-20
K 029	219-99-00027	RELAY,1 FORM A,GOLD CONT	1	EA	FWSI/MML	28531-20
K 030	219-99-00027	RELAY,1 FORM A,GOLD CONT	1	EA	FWSI/MML	28531-20
K 031	219-99-00027	RELAY,1 FORM A,GOLD CONT	1	EA	FWSI/MML	28531-20
K 032	219-99-00027	RELAY,1 FORM A,GOLD CONT	1	EA	FWSI/MML	28531-20
K 033	219-99-00027	RELAY,1 FORM A,GOLD CONT	1	EA	FWSI/MML	28531-20
K 034	219-99-00028	RELAY,2 FORM A,GOLD CONT	1	EA	FWSI/MML	28531-21
K 035	219-99-00019	RELAY,2 FORM C,GOLD CONT	1	EA	FWSI/MML	28531-12
Q 001	263-34-24840	XSTR,NPN,HFE 150 MIN@1MA	1	EA	FCH/MML	2N2484
Q 002	263-34-24840	XSTR,NPN,HFE 150 MIN@1MA	1	EA	FCH/MML	2N2484
Q 003	263-10-39330	XSTR,NPN 30V VHF/UHF AMPL	1	EA	FCH/MML	2N3933
Q 004	263-10-39330	XSTR,NPN 30V VHF/UHF AMPL	1	EA	FCH/MML	2N3933
Q 005	263-10-39330	XSTR,NPN 30V VHF/UHF AMPL	1	EA	FCH/MML	2N3933
Q 006	263-10-39330	XSTR,NPN 30V VHF/UHF AMPL	1	EA	FCH/MML	2N3933
Q 007	263-10-39330	XSTR,NPN 30V VHF/UHF AMPL	1	EA	FCH/MML	2N3933
Q 008	263-10-39330	XSTR,NPN 30V VHF/UHF AMPL	1	EA	FCH/MML	2N3933
Q 009	263-10-39330	XSTR,NPN 30V VHF/UHF AMPL	1	EA	FCH/MML	2N3933
Q 010	263-10-39330	XSTR,NPN 30V VHF/UHF AMPL	1	EA	FCH/MML	2N3933
Q 011	263-10-39330	XSTR,NPN 30V VHF/UHF AMPL	1	EA	FCH/MML	2N3933
Q 012	263-10-39330	XSTR,NPN 30V VHF/UHF AMPL	1	EA	FCH/MML	2N3933
Q 015	263-10-22221	XSTR,NPN 75V,DC/UHF AMPL	1	EA	FCH/MML	2N2222A
R 001	616-02-01009	RES,10 OHM 5% 1/4W	1	EA	ALLEN BRAD	RC07GF100J
R 002	616-02-82000	RES,8.2K 5% 1/4W	1	EA	ALLEN BRAD	RC07GF822J
R 003	616-02-82000	RES,8.2K 5% 1/4W	1	EA	ALLEN BRAD	RC07GF822J
R 004	616-02-10009	RES,100 OHM 5% 1/4W	1	EA	ALLEN BRAD	RC07GF101J
R 005	616-02-56009	RES,560 OHM 5% 1/4W	1	EA	ALLEN BRAD	RC07GF561J
R 006	201-98-00150	POT,TRMR, 10 OHM 20% .5W	1	EA	BECK/MML	62PR10
R 007	616-02-56009	RES,560 OHM 5% 1/4W	1	EA	ALLEN BRAD	RC07GF561J

CONTINUED

PARTS LIST: 17396-1 MFR. NAME: FWSI PARENT STK. CONT. NO.: 205-89-00718

DESCRIPTION: PWA,LMTR,DET,SINGLE POLE 4142-04 UM: EA ECO NO.: 0401295 ENG. REV.: AF

ITEM NO.	COMPONENT STK. CONT. NO.	DESCRIPTION	QUANTITY	UM	MFR. NAME	MFR. PART/ASSY. NO.
R 008	616-02-30000	RES,3K 5% 1/4W	1	EA	ALLEN BRAD	RC07GF302J
R 009	616-02-30000	RES,3K 5% 1/4W	1	EA	ALLEN BRAD	RC07GF302J
R 011	616-02-01009	RES,10 OHM 5% 1/4W	1	EA	ALLEN BRAD	RC07GF100J
R 012	616-02-47000	RES,4.7K 5% 1/4W	1	EA	ALLEN BRAD	RC07GF472J
R 013	616-02-47000	RES,4.7K 5% 1/4W	1	EA	ALLEN BRAD	RC07GF472J
R 014	616-02-10009	RES,100 OHM 5% 1/4W	1	EA	ALLEN BRAD	RC07GF101J
R 015	616-02-10001	RES,10K 5% 1/4W	1	EA	ALLEN BRAD	RC07GF103J
R 016	616-02-10009	RES,100 OHM 5% 1/4W	1	EA	ALLEN BRAD	RC07GF101J
R 017	616-02-10001	RES,10K 5% 1/4W	1	EA	ALLEN BRAD	RC07GF103J
R 018	616-02-18000	RES,1.8K 5% 1/4W	1	EA	ALLEN BRAD	RC07GF182J
R 019	616-02-18000	RES,1.8K 5% 1/4W	1	EA	ALLEN BRAD	RC07GF182J
R 020	616-02-01009	RES,10 OHM 5% 1/4W	1	EA	ALLEN BRAD	RC07GF100J
R 021	616-02-12002	RES,120K 5% 1/4W	1	EA	ALLEN BRAD	RC07GF124J
R 022	616-02-10009	RES,100 OHM 5% 1/4W	1	EA	ALLEN BRAD	RC07GF101J
R 023	616-02-15000	RES,1.5K 5% 1/4W	1	EA	ALLEN BRAD	RC07GF152J
R 024	616-02-10009	RES,100 OHM 5% 1/4W	1	EA	ALLEN BRAD	RC07GF101J
R 025	616-02-10001	RES,10K 5% 1/4W	1	EA	ALLEN BRAD	RC07GF103J
R 026	616-02-10009	RES,100 OHM 5% 1/4W	1	EA	ALLEN BRAD	RC07GF101J
R 027	616-02-10001	RES,10K 5% 1/4W	1	EA	ALLEN BRAD	RC07GF103J
R 028	616-02-91009	RES,910 OHM 5% 1/4W	1	EA	ALLEN BRAD	RC07GF911J
R 029	616-02-91009	RES,910 OHM 5% 1/4W	1	EA	ALLEN BRAD	RC07GF911J
R 030	616-02-01009	RES,10 OHM 5% 1/4W	1	EA	ALLEN BRAD	RC07GF100J
R 031	616-02-62009	RES,620 OHM 5% 1/4W	1	EA	ALLEN BRAD	RC07GF621J
R 032	616-02-62009	RES,620 OHM 5% 1/4W	1	EA	ALLEN BRAD	RC07GF621J
R 033	616-02-10009	RES,100 OHM 5% 1/4W	1	EA	ALLEN BRAD	RC07GF101J
R 034	616-02-43009	RES. 430 OHM 5% 1/4W	1	EA	ALLEN BRAD	RC07GF431J
R 035	616-02-10009	RES,100 OHM 5% 1/4W	1	EA	ALLEN BRAD	RC07GF101J
R 036	616-02-91009	RES,910 OHM 5% 1/4W	1	EA	ALLEN BRAD	RC07GF911J
R 037	616-02-91009	RES,910 OHM 5% 1/4W	1	EA	ALLEN BRAD	RC07GF911J
R 038	616-02-01009	RES,10 OHM 5% 1/4W	1	EA	ALLEN BRAD	RC07GF100J
R 039	616-02-01009	RES,10 OHM 5% 1/4W	1	EA	ALLEN BRAD	RC07GF100J
R 040	616-02-10009	RES,100 OHM 5% 1/4W	1	EA	ALLEN BRAD	RC07GF101J
R 041	608-09-90909	RES, 909.0 OHM 1% 1/10W	1	EA	EMR	624
R 042	616-02-56009	RES,560 OHM 5% 1/4W	1	EA	ALLEN BRAD	RC07GF561J
R 043	616-02-10009	RES,100 OHM 5% 1/4W	1	EA	ALLEN BRAD	RC07GF101J
R 045	616-02-10009	RES,100 OHM 5% 1/4W	1	EA	ALLEN BRAD	RC07GF101J
R 047	616-02-56009	RES,560 OHM 5% 1/4W	1	EA	ALLEN BRAD	RC07GF561J
R 048	616-02-10009	RES,100 OHM 5% 1/4W	1	EA	ALLEN BRAD	RC07GF101J
R 049	608-09-90909	RES, 909.0 OHM 1% 1/10W	1	EA	EMR	624
R 052	608-09-10000	RES. 1K 1% 1/10W	1	EA	FWSI	624
R 053	616-02-15009	RES,150 OHM 5% 1/4W	1	EA	ALLEN BRAD	RC07GF151J

CONTINUED

PARTS LIST: 17396-1 MFR. NAME: FWSI PARENT STK. CONT. NO.: 205-89-00718

DESCRIPTION: PWA,LMTR,DET,SINGLE POLE UM: EA ECO NO.: 0401295 ENG. REV.: AF
4142-04

ITEM NO.	COMPONENT STK. CONT. NO.	DESCRIPTION	QUANTITY	UM	MFR. NAME	MFR. PART/ASSY. NO.
R 054	608-09-10000	RES. 1K 1% 1/10W	1	EA	FWSI	624
R 056	608-09-75009	RES, 750.0 OHM 1% 1/10W	1	EA	FWSI	624
R 057	608-09-75009	RES, 750.0 OHM 1% 1/10W	1	EA	FWSI	624
R 060	616-02-39009	RES,390 OHM 5% 1/4W	1	EA	ALLEN BRAD	RC07GF391J
R 061	616-02-47009	RES,470 OHM 5% 1/4W	1	EA	ALLEN BRAD	RC07GF471J
R 062	608-09-24900	RES, 2.49K 1% 1/10W	1	EA	FWSI	624
R 063	608-09-49900	RES. 4.99K 1% 1/10W	1	EA	FWSI	624
R 064	608-09-10001	RES. 10K 1% 1/10W	1	EA	FWSI	624
R 065	608-09-20001	RES. 20K 1% 1/10W	1	EA	FWSI	624
R 066	608-09-24909	RES, 249.0 OHM 1% 1/10W	1	EA	FWSI	624
R 067	608-09-49909	RES, 499.0 OHM 1% 1/10W	1	EA	FWSI	624
R 068	608-09-10000	RES. 1K 1% 1/10W	1	EA	FWSI	624
R 069	608-09-20000	RES. 2.0K 1% 1/10W	1	EA	FWSI	624
R 070	608-09-11802	RES, 118.0K 1% 1/10W	1	EA	EMR	624
R 071	201-98-00063	POT,TRMR, 20 K 10% .5W	1	EA	BECK/MML	62PR20K
R 072	608-09-11802	RES, 118.0K 1% 1/10W	1	EA	EMR	624
R 073	616-02-20009	RES,200 OHM 5% 1/4W	1	EA	ALLEN BRAD	RC07GF201J
R 074	608-09-10002	RES, 100.0K 1% 1/10W	1	EA	FWSI	624
R 075	608-09-20002	RES, 200.0K 1% 1/10W	1	EA	FWSI	624
R 076	608-09-40202	RES, 402.0K 1% 1/10W	1	EA	FWSI	624
R 077	608-01-80602	RES, 806K 1% 1/10W 100 PP	1	EA	EMR	624
R 079	608-09-10201	RES, 10.2K 1% 1/10W	1	EA	FWSI	624
R 081	608-09-20501	RES. 20.5K 1% 1/10W	1	EA	FWSI	624
R 083	608-09-41201	RES, 41.2K 1% 1/10W	1	EA	FWSI	624
R 085	608-09-80601	RES, 80.6K 1% 1/10W	1	EA	FWSI	624
R 087	608-09-10200	RES, 1.02K 1% 1/10W	1	EA	EMR	624
R 089	608-09-20500	RES. 2.05K 1% 1/10W	1	EA	FWSI	624
R 091	608-09-41200	RES, 4.12K 1% 1/10W	1	EA	EMR	624
R 093	608-09-80600	RES, 8.06K 1% 1/10W	1	EA	EMR	624
R 095	608-09-80609	RES, 806.0 OHM 1% 1/10W	1	EA	FWSI	624
R 096	201-98-00063	POT,TRMR, 20 K 10% .5W	1	EA	BECK/MML	62PR20K
R 098	616-02-01009	RES,10 OHM 5% 1/4W	1	EA	ALLEN BRAD	RC07GF100J
R 099	616-02-01009	RES,10 OHM 5% 1/4W	1	EA	ALLEN BRAD	RC07GF100J
R 100	608-09-00000	RES,*TVAR* 1%,1/10W	AR	EA	FWSI	624
R 102	616-02-20009	RES,200 OHM 5% 1/4W	1	EA	ALLEN BRAD	RC07GF201J
R 103	608-09-23700	RES., 2.37K 1% 1/10W	1	EA	FWSI	624
R 104	608-09-34800	RES, 3.48K 1% 1/10W	1	EA	EMR	624
R 105	608-09-63400	RES, 6.34K 1% 1/10W	1	EA	EMR	624
R 106	608-09-10501	RES, 10.5K 1% 1/10W	1	EA	FWSI	624
R 107	608-09-10501	RES, 10.5K 1% 1/10W	1	EA	FWSI	624
R 109	616-02-01009	RES,10 OHM 5% 1/4W	1	EA	ALLEN BRAD	RC07GF100J

CONTINUED

PARTS LIST: 17396-1 MFR. NAME: FWSI PARENT STK. CONT. NO.: 205-89-00718

DESCRIPTION: PWA,LMTR,DET,SINGLE POLE 4142-04 UM: EA ECO NO.: 0401295 ENG. REV.: AF

ITEM NO.	COMPONENT STK. CONT. NO.	DESCRIPTION	QUANTITY	UM	MFR. NAME	MFR. PART/ASSY. NO.
R 110	616-02-01009	RES,10 OHM 5% 1/4W	1	EA	ALLEN BRAD	RC07GF100J
R 111	616-02-05609	RES,56 OHM 5% 1/4W	1	EA	ALLEN BRAD	RC07GF560J
R 113	616-02-00000	RES,*TVAR*	AR	EA	FWSI	00000
R 114	616-02-00000	RES,*TVAR*	AR	EA	FWSI	00000
R 115	608-09-64901	RES, 64.9K 1% 1/10W	1	EA	FWSI	624
U 001	046-97-00209	IC,LIN AMPL,OPNL HS SLEW	1	EA	HAS/MML	HA2-2525-5
U 002	046-97-00209	IC,LIN AMPL,OPNL HS SLEW	1	EA	HAS/MML	HA2-2525-5
?C 026	305-20-12600	CAP. 1260PF 1% 500V	1	EA	FWSI	600
?C 035	305-20-12600	CAP. 1260PF 1% 500V	1	EA	FWSI	600
?R 055	608-09-86600	RES, 8.66K 1% 1/10W	1	EA	EMR	624
?R 116	608-09-86600	RES, 8.66K 1% 1/10W	1	EA	EMR	624
REF001	905-01-00539	SCHEMATIC,PWA	AR	EA	FWSI	17394
REF002	905-04-00002	SPEC,COMPONENT SPACING	AR	EA	FWSI	9500-1
REF005	204-89-00299	PWB,SWCHBL FREQ CHAN SEL	AR	EA	FWSI	17498

END OF LIST

PARTS LIST: 17396-2 MFR. NAME: FWSI PARENT STK. CONT. NO.: 205-89-00719

DESCRIPTION: PWA,LMTR,DET,SINGLE POLE UM: EA ECO NO.: 0401295 ENG. REV.: AP
4142-06

ITEM NO.	COMPONENT STK. CONT. NO.	DESCRIPTION	QUANTITY	UM	MFR. NAME	MFR. PART/ASSY. NO.
001	204-89-00279	PWB,LMTR, DET SINGLE POLE	1	EA	FWSI	17395
003	299-99-00008	EJCTR,CARD,.062BD,POSN8	2	EA	FWSI	6477-7
005	229-02-00065	SCREW,2-56X1/4 PAN HD	2	EA	PRCMT OPTION	MS51957-3
006	273-02-00001	WASHER,#2,FLAT,0.149 DIA	2	EA	PRCMT OPTION	NAS620C2
007	273-02-00024	WASHER,#2,INT TOOTH	2	EA	PRCMT OPTION	MS35333-69
013	276-98-00081	WIRE,#22,STRD,WHT,600V	1.5FT		QPL 22759/11	NAS-703-22-U-C-9
015	205-89-01014	PWA, DETECTOR SWITCHES	1	EA	FWSI	21777
016	140-99-00136	INS,.25X.75 .062THK G10	1	EA	FWSI	21968
017	060-12-00004	CMPD,SEALANT,GENL PURPOSE	AR	EA	G.E.	RTV-102
018	060-12-00004	CMPD,SEALANT,GENL PURPOSE	AR	EA	G.E.	RTV-102
020	189-98-00004	PAD,XSTR 4 PIN*USE OPTL*	12	EA	DEL BLINN	100-000-NY
?R116	608-09-86600	RES, 8.66K 1% 1/10W	1	EA	EMR	624
C 001	337-12-22004	CAP., 22MF 10% 15V	1	EA	FWSI	601
C 002	337-12-22004	CAP., 22MF 10% 15V	1	EA	FWSI	601
C 003	301-13-10002	CAP,CR , 50V .100 UF 20%	1	EA	ERIE/MML	8131-050-651-104M
C 004	301-13-10002	CAP,CR , 50V .100 UF 20%	1	EA	ERIE/MML	8131-050-651-104M
C 005	301-13-10002	CAP,CR , 50V .100 UF 20%	1	EA	ERIE/MML	8131-050-651-104M
C 006	301-13-10002	CAP,CR , 50V .100 UF 20%	1	EA	ERIE/MML	8131-050-651-104M
C 007	301-23-27003	CAP,CR , 50V 2.7 UF 20%	1	EA	ERIE/MML	8141-050-651-275M
C 008	301-23-27003	CAP,CR , 50V 2.7 UF 20%	1	EA	ERIE/MML	8141-050-651-275M
C 009	301-13-10002	CAP,CR , 50V .100 UF 20%	1	EA	ERIE/MML	8131-050-651-104M
C 010	301-13-10002	CAP,CR , 50V .100 UF 20%	1	EA	ERIE/MML	8131-050-651-104M
C 011	301-23-27003	CAP,CR , 50V 2.7 UF 20%	1	EA	ERIE/MML	8141-050-651-275M
C 012	301-23-27003	CAP,CR , 50V 2.7 UF 20%	1	EA	ERIE/MML	8141-050-651-275M
C 013	301-13-10003	CAP,CR , 50V 1.00UF 20%	1	EA	ERIE/MML	8131-050-651-105M
C 014	301-13-10002	CAP,CR , 50V .100 UF 20%	1	EA	ERIE/MML	8131-050-651-104M
C 015	301-13-10002	CAP,CR , 50V .100 UF 20%	1	EA	ERIE/MML	8131-050-651-104M
C 016	337-12-22004	CAP., 22MF 10% 15V	1	EA	FWSI	601
C 017	301-13-10002	CAP,CR , 50V .100 UF 20%	1	EA	ERIE/MML	8131-050-651-104M
C 018	301-13-10002	CAP,CR , 50V .100 UF 20%	1	EA	ERIE/MML	8131-050-651-104M
C 019	339-13-10005	CAP, 100MF 10% 20V D CASE	1	EA	FWSI	601
C 020	339-13-10005	CAP, 100MF 10% 20V D CASE	1	EA	FWSI	601
C 021	301-13-10002	CAP,CR , 50V .100 UF 20%	1	EA	ERIE/MML	8131-050-651-104M
C 022	301-13-10002	CAP,CR , 50V .100 UF 20%	1	EA	ERIE/MML	8131-050-651-104M
C 023	301-13-10002	CAP,CR , 50V .100 UF 20%	1	EA	ERIE/MML	8131-050-651-104M
C 024	384-05-14001	CAP., .014MF 1% 50V	1	EA	FWSI	949
C 028	304-20-13509	CAP. 135PF 1% 500V	1	EA	FWSI	600
C 030	304-01-01609	CAP. 16PF .5PF 500V	1	EA	FWSI	600
C 031	304-01-01609	CAP. 16PF .5PF 500V	1	EA	FWSI	600
C 032	304-20-13509	CAP. 135PF 1% 500V	1	EA	FWSI	600
C 037	384-05-14001	CAP., .014MF 1% 50V	1	EA	FWSI	949

CONTINUED

PARTS LIST: 17396-2 MFR. NAME: FWSI PARENT STK. CONT. NO.: 205-89-00719

DESCRIPTION: PWA,LMTR,DET,SINGLE POLE UM: EA ECO NO.: 0401295 ENG. REV.: AP
4142-06

ITEM NO.	COMPONENT STK. CONT. NO.	DESCRIPTION	QUANTITY	UM	MFR. NAME	MFR. PART/ASSY. NO.
C 038	304-20-47009	CAP. 470PF 1% 500V	1	EA	FWSI	600
C 039	304-20-21009	CAP. 210PF 1% 500V	1	EA	FWSI	600
C 040	305-20-43000	CAP. 4300PF 1% 500V	1	EA	FWSI	600
C 041	305-20-19200	CAP. 1920PF 1% 500V	1	EA	FWSI	600
C 042	384-05-49001	CAP., .0490MF 1% 50V	1	EA	FWSI	949
C 043	384-05-21601	CAP., .0216MF 1% 50V	1	EA	FWSI	949
C 044	336-05-47002	CAP. .47MF 5% 35V	1	EA	FWSI	601
C 046	336-05-22002	CAP, .22UF 5% 35V	1	EA	FWSI	601
C 047	337-05-47003	CAP. 4.7MF 5% 35V	1	EA	FWSI	601
C 049	337-05-22003	CAP. 2.2MF 5% 35V	1	EA	FWSI	601
C 050	301-13-10003	CAP,CR , 50V 1.00UF 20%	1	EA	ERIE/MML	8131-050-651-105M
C 052	304-13-06809	CAP. 68PF 1% 500V	1	EA	FWSI	600
C 053	304-01-00309	CAP. 3PF .5PF 500V	1	EA	FWSI	600
C 054	301-13-10002	CAP,CR , 50V .100 UF 20%	1	EA	ERIE/MML	8131-050-651-104M
C 055	301-13-10002	CAP,CR , 50V .100 UF 20%	1	EA	ERIE/MML	8131-050-651-104M
C 056	301-13-10003	CAP,CR , 50V 1.00UF 20%	1	EA	ERIE/MML	8131-050-651-105M
C 057	304-13-06809	CAP. 68PF 1% 500V	1	EA	FWSI	600
C 058	304-01-00309	CAP. 3PF .5PF 500V	1	EA	FWSI	600
C 059	301-13-10002	CAP,CR , 50V .100 UF 20%	1	EA	ERIE/MML	8131-050-651-104M
C 060	301-13-10002	CAP,CR , 50V .100 UF 20%	1	EA	ERIE/MML	8131-050-651-104M
C 061	337-14-68003	CAP. 6.8MF 10% 35V	1	EA	FWSI	601
C 062	301-13-10003	CAP,CR , 50V 1.00UF 20%	1	EA	ERIE/MML	8131-050-651-105M
CR001	088-10-41480	DIODE,SW,75V/5UA,4NS/10MA	1	EA	CODI/MML	1N4148
CR002	088-10-41480	DIODE,SW,75V/5UA,4NS/10MA	1	EA	CODI/MML	1N4148
CR003	088-10-41480	DIODE,SW,75V/5UA,4NS/10MA	1	EA	CODI/MML	1N4148
CR004	088-10-41480	DIODE,SW,75V/5UA,4NS/10MA	1	EA	CODI/MML	1N4148
CR005	088-10-41480	DIODE,SW,75V/5UA,4NS/10MA	1	EA	CODI/MML	1N4148
CR006	088-10-41480	DIODE,SW,75V/5UA,4NS/10MA	1	EA	CODI/MML	1N4148
CR007	088-10-41480	DIODE,SW,75V/5UA,4NS/10MA	1	EA	CODI/MML	1N4148
CR008	088-10-41480	DIODE,SW,75V/5UA,4NS/10MA	1	EA	CODI/MML	1N4148
CR009	088-10-09420	DIO,REF,11.7V/7.5MA,.005%	1	EA	CODI/MML	1N942,A,B
CR010	088-10-41480	DIODE,SW,75V/5UA,4NS/10MA	1	EA	CODI/MML	1N4148
CR011	088-10-41480	DIODE,SW,75V/5UA,4NS/10MA	1	EA	CODI/MML	1N4148
CR012	088-10-41480	DIODE,SW,75V/5UA,4NS/10MA	1	EA	CODI/MML	1N4148
CR013	088-10-41480	DIODE,SW,75V/5UA,4NS/10MA	1	EA	CODI/MML	1N4148
CR014	088-10-41480	DIODE,SW,75V/5UA,4NS/10MA	1	EA	CODI/MML	1N4148
CR015	088-10-41480	DIODE,SW,75V/5UA,4NS/10MA	1	EA	CODI/MML	1N4148
CR016	088-10-41480	DIODE,SW,75V/5UA,4NS/10MA	1	EA	CODI/MML	1N4148
CR017	088-10-41480	DIODE,SW,75V/5UA,4NS/10MA	1	EA	CODI/MML	1N4148
CR018	088-10-41480	DIODE,SW,75V/5UA,4NS/10MA	1	EA	CODI/MML	1N4148
CR019	088-10-41480	DIODE,SW,75V/5UA,4NS/10MA	1	EA	CODI/MML	1N4148

CONTINUED

PARTS LIST: 17396-2 MFR. NAME: FWSI PARENT STK. CONT. NO.: 205-89-00719

DESCRIPTION: PWA,LMTR,DET,SINGLE POLE 4142-06 UM: EA ECO NO.: 0401295 ENG. REV.: AP

ITEM NO.	COMPONENT STK. CONT. NO.	DESCRIPTION	QUANTITY	UM	MFR. NAME	MFR. PART/ASSY. NO.
CR020	088-10-41480	DIODE,SW,75V/5UA,4NS/10MA	1	EA	CODI/MML	1N4148
CR021	088-10-41480	DIODE,SW,75V/5UA,4NS/10MA	1	EA	CODI/MML	1N4148
CR022	088-10-41480	DIODE,SW,75V/5UA,4NS/10MA	1	EA	CODI/MML	1N4148
CR023	088-10-41480	DIODE,SW,75V/5UA,4NS/10MA	1	EA	CODI/MML	1N4148
CR024	088-10-41480	DIODE,SW,75V/5UA,4NS/10MA	1	EA	CODI/MML	1N4148
CR025	088-10-41480	DIODE,SW,75V/5UA,4NS/10MA	1	EA	CODI/MML	1N4148
CR026	088-10-41480	DIODE,SW,75V/5UA,4NS/10MA	1	EA	CODI/MML	1N4148
CR027	088-10-41480	DIODE,SW,75V/5UA,4NS/10MA	1	EA	CODI/MML	1N4148
CR028	088-10-41480	DIODE,SW,75V/5UA,4NS/10MA	1	EA	CODI/MML	1N4148
CR029	088-10-41480	DIODE,SW,75V/5UA,4NS/10MA	1	EA	CODI/MML	1N4148
CR030	088-10-41480	DIODE,SW,75V/5UA,4NS/10MA	1	EA	CODI/MML	1N4148
CR031	088-10-41480	DIODE,SW,75V/5UA,4NS/10MA	1	EA	CODI/MML	1N4148
CR032	088-10-41480	DIODE,SW,75V/5UA,4NS/10MA	1	EA	CODI/MML	1N4148
CR033	088-10-41480	DIODE,SW,75V/5UA,4NS/10MA	1	EA	CODI/MML	1N4148
CR034	088-10-41480	DIODE,SW,75V/5UA,4NS/10MA	1	EA	CODI/MML	1N4148
CR035	088-10-41480	DIODE,SW,75V/5UA,4NS/10MA	1	EA	CODI/MML	1N4148
CR036	088-10-41480	DIODE,SW,75V/5UA,4NS/10MA	1	EA	CODI/MML	1N4148
CR037	088-10-41480	DIODE,SW,75V/5UA,4NS/10MA	1	EA	CODI/MML	1N4148
CR038	088-10-41480	DIODE,SW,75V/5UA,4NS/10MA	1	EA	CODI/MML	1N4148
CR039	088-10-41480	DIODE,SW,75V/5UA,4NS/10MA	1	EA	CODI/MML	1N4148
CR040	088-10-41480	DIODE,SW,75V/5UA,4NS/10MA	1	EA	CODI/MML	1N4148
CR041	088-10-41480	DIODE,SW,75V/5UA,4NS/10MA	1	EA	CODI/MML	1N4148
CR042	088-10-41480	DIODE,SW,75V/5UA,4NS/10MA	1	EA	CODI/MML	1N4148
CR043	088-10-41480	DIODE,SW,75V/5UA,4NS/10MA	1	EA	CODI/MML	1N4148
K 001	219-99-00018	RELAY,2 FORM A,RHOD CONT	1	EA	FWSI/MML	28531-11
K 002	219-99-00018	RELAY,2 FORM A,RHOD CONT	1	EA	FWSI/MML	28531-11
K 003	219-99-00018	RELAY,2 FORM A,RHOD CONT	1	EA	FWSI/MML	28531-11
K 004	219-99-00027	RELAY,1 FORM A,GOLD CONT	1	EA	FWSI/MML	28531-20
K 005	219-99-00027	RELAY,1 FORM A,GOLD CONT	1	EA	FWSI/MML	28531-20
K 006	219-99-00027	RELAY,1 FORM A,GOLD CONT	1	EA	FWSI/MML	28531-20
K 007	219-99-00027	RELAY,1 FORM A,GOLD CONT	1	EA	FWSI/MML	28531-20
K 008	219-99-00027	RELAY,1 FORM A,GOLD CONT	1	EA	FWSI/MML	28531-20
K 009	219-99-00027	RELAY,1 FORM A,GOLD CONT	1	EA	FWSI/MML	28531-20
K 010	219-99-00027	RELAY,1 FORM A,GOLD CONT	1	EA	FWSI/MML	28531-20
K 011	219-99-00027	RELAY,1 FORM A,GOLD CONT	1	EA	FWSI/MML	28531-20
K 012	219-99-00027	RELAY,1 FORM A,GOLD CONT	1	EA	FWSI/MML	28531-20
K 013	219-99-00018	RELAY,2 FORM A,RHOD CONT	1	EA	FWSI/MML	28531-11
K 014	219-99-00018	RELAY,2 FORM A,RHOD CONT	1	EA	FWSI/MML	28531-11
K 015	219-99-00018	RELAY,2 FORM A,RHOD CONT	1	EA	FWSI/MML	28531-11
K 016	219-99-00018	RELAY,2 FORM A,RHOD CONT	1	EA	FWSI/MML	28531-11
K 017	219-99-00027	RELAY,1 FORM A,GOLD CONT	1	EA	FWSI/MML	28531-20

CONTINUED

PARTS LIST: 17396-2 MFR. NAME: FWSI PARENT STK. CONT. NO.: 205-89-00719

DESCRIPTION: PWA,LMTR,DET,SINGLE POLE UM: EA ECO NO.: 0401295 ENG. REV.: AP
4142-06

ITEM NO.	COMPONENT STK. CONT. NO.	DESCRIPTION	QUANTITY	UM	MFR. NAME	MFR. PART/ASSY. NO.
K 018	219-99-00027	RELAY,1 FORM A,GOLD CONT	1	EA	FWSI/MML	28531-20
K 019	219-99-00027	RELAY,1 FORM A,GOLD CONT	1	EA	FWSI/MML	28531-20
K 020	219-99-00027	RELAY,1 FORM A,GOLD CONT	1	EA	FWSI/MML	28531-20
K 021	219-99-00027	RELAY,1 FORM A,GOLD CONT	1	EA	FWSI/MML	28531-20
K 022	219-99-00027	RELAY,1 FORM A,GOLD CONT	1	EA	FWSI/MML	28531-20
K 023	219-99-00027	RELAY,1 FORM A,GOLD CONT	1	EA	FWSI/MML	28531-20
K 024	219-99-00027	RELAY,1 FORM A,GOLD CONT	1	EA	FWSI/MML	28531-20
K 025	219-99-00027	RELAY,1 FORM A,GOLD CONT	1	EA	FWSI/MML	28531-20
K 026	219-99-00027	RELAY,1 FORM A,GOLD CONT	1	EA	FWSI/MML	28531-20
K 027	219-99-00027	RELAY,1 FORM A,GOLD CONT	1	EA	FWSI/MML	28531-20
K 028	219-99-00027	RELAY,1 FORM A,GOLD CONT	1	EA	FWSI/MML	28531-20
K 029	219-99-00027	RELAY,1 FORM A,GOLD CONT	1	EA	FWSI/MML	28531-20
K 030	219-99-00027	RELAY,1 FORM A,GOLD CONT	1	EA	FWSI/MML	28531-20
K 031	219-99-00027	RELAY,1 FORM A,GOLD CONT	1	EA	FWSI/MML	28531-20
K 032	219-99-00027	RELAY,1 FORM A,GOLD CONT	1	EA	FWSI/MML	28531-20
K 033	219-99-00027	RELAY,1 FORM A,GOLD CONT	1	EA	FWSI/MML	28531-20
K 034	219-99-00028	RELAY,2 FORM A,GOLD CONT	1	EA	FWSI/MML	28531-21
K 035	219-99-00019	RELAY,2 FORM C,GOLD CONT	1	EA	FWSI/MML	28531-12
Q 001	263-34-24840	XSTR,NPN,HFE 150 MIN@1MA	1	EA	FCH/MML	2N2484
Q 002	263-34-24840	XSTR,NPN,HFE 150 MIN@1MA	1	EA	FCH/MML	2N2484
Q 003	263-10-39330	XSTR,NPN 30V VHF/UHF AMPL	1	EA	FCH/MML	2N3933
Q 004	263-10-39330	XSTR,NPN 30V VHF/UHF AMPL	1	EA	FCH/MML	2N3933
Q 005	263-10-39330	XSTR,NPN 30V VHF/UHF AMPL	1	EA	FCH/MML	2N3933
Q 006	263-10-39330	XSTR,NPN 30V VHF/UHF AMPL	1	EA	FCH/MML	2N3933
Q 007	263-10-39330	XSTR,NPN 30V VHF/UHF AMPL	1	EA	FCH/MML	2N3933
Q 008	263-10-39330	XSTR,NPN 30V VHF/UHF AMPL	1	EA	FCH/MML	2N3933
Q 009	263-10-39330	XSTR,NPN 30V VHF/UHF AMPL	1	EA	FCH/MML	2N3933
Q 010	263-10-39330	XSTR,NPN 30V VHF/UHF AMPL	1	EA	FCH/MML	2N3933
Q 011	263-10-39330	XSTR,NPN 30V VHF/UHF AMPL	1	EA	FCH/MML	2N3933
Q 012	263-10-39330	XSTR,NPN 30V VHF/UHF AMPL	1	EA	FCH/MML	2N3933
Q 015	263-10-22221	XSTR,NPN 75V,DC/UHF AMPL	1	EA	FCH/MML	2N2222A
R 001	616-02-01009	RES,10 OHM 5% 1/4W	1	EA	ALLEN BRAD	RC07GF100J
R 002	616-02-82000	RES,8.2K 5% 1/4W	1	EA	ALLEN BRAD	RC07GF822J
R 003	616-02-82000	RES,8.2K 5% 1/4W	1	EA	ALLEN BRAD	RC07GF822J
R 004	616-02-10009	RES,100 OHM 5% 1/4W	1	EA	ALLEN BRAD	RC07GF101J
R 005	616-02-56009	RES,560 OHM 5% 1/4W	1	EA	ALLEN BRAD	RC07GF561J
R 006	201-98-00150	POT,TRMR, 10 OHM 20% .5W	1	EA	BECK/MML	62PR10
R 007	616-02-56009	RES,560 OHM 5% 1/4W	1	EA	ALLEN BRAD	RC07GF561J
R 008	616-02-30000	RES,3K 5% 1/4W	1	EA	ALLEN BRAD	RC07GF302J
R 009	616-02-30000	RES,3K 5% 1/4W	1	EA	ALLEN BRAD	RC07GF302J
R 011	616-02-01009	RES,10 OHM 5% 1/4W	1	EA	ALLEN BRAD	RC07GF100J

CONTINUED

PARTS LIST: 17396-2 MFR. NAME: FWSI PARENT STK. CONT. NO.: 205-89-00719

DESCRIPTION: PWA,LMTR,DET,SINGLE POLE UM: EA ECO NO.: 0401295 ENG. REV.: AP
4142-06

ITEM NO.	COMPONENT STK. CONT. NO.	DESCRIPTION	QUANTITY	UM	MFR. NAME	MFR. PART/ASSY. NO.
R 012	616-02-47000	RES,4.7K 5% 1/4W	1	EA	ALLEN BRAD	RC07GF472J
R 013	616-02-47000	RES,4.7K 5% 1/4W	1	EA	ALLEN BRAD	RC07GF472J
R 014	616-02-10009	RES,100 OHM 5% 1/4W	1	EA	ALLEN BRAD	RC07GF101J
R 015	616-02-10001	RES,10K 5% 1/4W	1	EA	ALLEN BRAD	RC07GF103J
R 016	616-02-10009	RES,100 OHM 5% 1/4W	1	EA	ALLEN BRAD	RC07GF101J
R 017	616-02-10001	RES,10K 5% 1/4W	1	EA	ALLEN BRAD	RC07GF103J
R 018	616-02-18000	RES,1.8K 5% 1/4W	1	EA	ALLEN BRAD	RC07GF182J
R 019	616-02-18000	RES,1.8K 5% 1/4W	1	EA	ALLEN BRAD	RC07GF182J
R 020	616-02-01009	RES,10 OHM 5% 1/4W	1	EA	ALLEN BRAD	RC07GF100J
R 021	616-02-12002	RES,120K 5% 1/4W	1	EA	ALLEN BRAD	RC07GF124J
R 022	616-02-10009	RES,100 OHM 5% 1/4W	1	EA	ALLEN BRAD	RC07GF101J
R 023	616-02-15000	RES,1.5K 5% 1/4W	1	EA	ALLEN BRAD	RC07GF152J
R 024	616-02-10009	RES,100 OHM 5% 1/4W	1	EA	ALLEN BRAD	RC07GF101J
R 025	616-02-10001	RES,10K 5% 1/4W	1	EA	ALLEN BRAD	RC07GF103J
R 026	616-02-10009	RES,100 OHM 5% 1/4W	1	EA	ALLEN BRAD	RC07GF101J
R 027	616-02-10001	RES,10K 5% 1/4W	1	EA	ALLEN BRAD	RC07GF103J
R 028	616-02-91009	RES,910 OHM 5% 1/4W	1	EA	ALLEN BRAD	RC07GF911J
R 029	616-02-91009	RES,910 OHM 5% 1/4W	1	EA	ALLEN BRAD	RC07GF911J
R 030	616-02-01009	RES,10 OHM 5% 1/4W	1	EA	ALLEN BRAD	RC07GF100J
R 031	616-02-62009	RES,620 OHM 5% 1/4W	1	EA	ALLEN BRAD	RC07GF621J
R 032	616-02-62009	RES,620 OHM 5% 1/4W	1	EA	ALLEN BRAD	RC07GF621J
R 033	616-02-10009	RES,100 OHM 5% 1/4W	1	EA	ALLEN BRAD	RC07GF101J
R 034	616-02-43009	RES. 430 OHM 5% 1/4W	1	EA	ALLEN BRAD	RC07GF431J
R 035	616-02-10009	RES,100 OHM 5% 1/4W	1	EA	ALLEN BRAD	RC07GF101J
R 036	616-02-91009	RES,910 OHM 5% 1/4W	1	EA	ALLEN BRAD	RC07GF911J
R 037	616-02-91009	RES,910 OHM 5% 1/4W	1	EA	ALLEN BRAD	RC07GF911J
R 038	616-02-01009	RES,10 OHM 5% 1/4W	1	EA	ALLEN BRAD	RC07GF100J
R 039	616-02-01009	RES,10 OHM 5% 1/4W	1	EA	ALLEN BRAD	RC07GF100J
R 040	616-02-10009	RES,100 OHM 5% 1/4W	1	EA	ALLEN BRAD	RC07GF101J
R 041	608-09-90909	RES, 909.0 OHM 1% 1/10W	1	EA	EMR	624
R 042	616-02-56009	RES,560 OHM 5% 1/4W	1	EA	ALLEN BRAD	RC07GF561J
R 043	616-02-10009	RES,100 OHM 5% 1/4W	1	EA	ALLEN BRAD	RC07GF101J
R 045	616-02-10009	RES,100 OHM 5% 1/4W	1	EA	ALLEN BRAD	RC07GF101J
R 047	616-02-56009	RES,560 OHM 5% 1/4W	1	EA	ALLEN BRAD	RC07GF561J
R 048	616-02-10009	RES,100 OHM 5% 1/4W	1	EA	ALLEN BRAD	RC07GF101J
R 049	608-09-90909	RES, 909.0 OHM 1% 1/10W	1	EA	EMR	624
R 052	608-09-10000	RES. 1K 1% 1/10W	1	EA	FWSI	624
R 053	616-02-15009	RES,150 OHM 5% 1/4W	1	EA	ALLEN BRAD	RC07GF151J
R 054	608-09-10000	RES. 1K 1% 1/10W	1	EA	FWSI	624
R 056	608-09-75009	RES, 750.0 OHM 1% 1/10W	1	EA	FWSI	624
R 057	608-09-75009	RES, 750.0 OHM 1% 1/10W	1	EA	FWSI	624

CONTINUED

PARTS LIST: 17396-2 MFR. NAME: FWSI PARENT STK. CONT. NO.: 205-89-00719

DESCRIPTION: PWA,LMTR,DET,SINGLE POLE UM: EA ECO NO.: 0401295 ENG. REV.: AP
4142-06

ITEM NO.	COMPONENT STK. CONT. NO.	DESCRIPTION	QUANTITY	UM	MFR. NAME	MFR. PART/ASSY. NO.
R 060	616-02-39009	RES,390 OHM 5% 1/4W	1	EA	ALLEN BRAD	RC07GF391J
R 061	616-02-47009	RES,470 OHM 5% 1/4W	1	EA	ALLEN BRAD	RC07GF471J
R 062	608-09-24900	RES, 2.49K 1% 1/10W	1	EA	FWSI	624
R 063	608-09-49900	RES. 4.99K 1% 1/10W	1	EA	FWSI	624
R 064	608-09-10001	RES. 10K 1% 1/10W	1	EA	FWSI	624
R 065	608-09-20001	RES. 20K 1% 1/10W	1	EA	FWSI	624
R 066	608-09-24909	RES, 249.0 OHM 1% 1/10W	1	EA	FWSI	624
R 067	608-09-49909	RES, 499.0 OHM 1% 1/10W	1	EA	FWSI	624
R 068	608-09-10000	RES. 1K 1% 1/10W	1	EA	FWSI	624
R 069	608-09-20000	RES. 2.0K 1% 1/10W	1	EA	FWSI	624
R 070	608-09-11802	RES, 118.0K 1% 1/10W	1	EA	EMR	624
R 071	201-98-00063	POT,TRMR, 20 K 10% .5W	1	EA	BECK/MML	62PR20K
R 072	608-09-11802	RES, 118.0K 1% 1/10W	1	EA	EMR	624
R 073	616-02-20009	RES,200 OHM 5% 1/4W	1	EA	ALLEN BRAD	RC07GF201J
R 074	608-09-10002	RES, 100.0K 1% 1/10W	1	EA	FWSI	624
R 075	608-09-20002	RES, 200.0K 1% 1/10W	1	EA	FWSI	624
R 076	608-09-40202	RES, 402.0K 1% 1/10W	1	EA	FWSI	624
R 077	608-01-80602	RES, 806K 1% 1/10W 100 PP	1	EA	EMR	624
R 079	608-09-10201	RES, 10.2K 1% 1/10W	1	EA	FWSI	624
R 081	608-09-20501	RES. 20.5K 1% 1/10W	1	EA	FWSI	624
R 083	608-09-41201	RES, 41.2K 1% 1/10W	1	EA	FWSI	624
R 085	608-09-80601	RES, 80.6K 1% 1/10W	1	EA	FWSI	624
R 087	608-09-10200	RES, 1.02K 1% 1/10W	1	EA	EMR	624
R 089	608-09-20500	RES. 2.05K 1% 1/10W	1	EA	FWSI	624
R 091	608-09-41200	RES, 4.12K 1% 1/10W	1	EA	EMR	624
R 093	608-09-80600	RES, 8.06K 1% 1/10W	1	EA	EMR	624
R 095	608-09-80609	RES, 806.0 OHM 1% 1/10W	1	EA	FWSI	624
R 096	201-98-00063	POT,TRMR, 20 K 10% .5W	1	EA	BECK/MML	62PR20K
R 098	616-02-01009	RES,10 OHM 5% 1/4W	1	EA	ALLEN BRAD	RC07GF100J
R 099	616-02-01009	RES,10 OHM 5% 1/4W	1	EA	ALLEN BRAD	RC07GF100J
R 100	608-09-00000	RES,*TVAR* 1%,1/10W	AR	EA	FWSI	624
R 102	616-02-20009	RES,200 OHM 5% 1/4W	1	EA	ALLEN BRAD	RC07GF201J
R 103	608-09-23700	RES., 2.37K 1% 1/10W	1	EA	FWSI	624
R 104	608-09-34800	RES, 3.48K 1% 1/10W	1	EA	EMR	624
R 105	608-09-63400	RES, 6.34K 1% 1/10W	1	EA	EMR	624
R 106	608-09-10501	RES, 10.5K 1% 1/10W	1	EA	FWSI	624
R 107	608-09-10501	RES, 10.5K 1% 1/10W	1	EA	FWSI	624
R 109	616-02-01009	RES,10 OHM 5% 1/4W	1	EA	ALLEN BRAD	RC07GF100J
R 110	616-02-01009	RES,10 OHM 5% 1/4W	1	EA	ALLEN BRAD	RC07GF100J
R 111	616-02-05609	RES,56 OHM 5% 1/4W	1	EA	ALLEN BRAD	RC07GF560J
R 113	616-02-00000	RES,*TVAR*	AR	EA	FWSI	00000

CONTINUED

PARTS LIST: 17396-2 MFR. NAME: FWSI PARENT STK. CONT. NO.: 205-89-00719

DESCRIPTION: PWA,LMTR,DET,SINGLE POLE UM: EA ECO NO.: 0401295 ENG. REV.: AP
4142-06

ITEM NO.	COMPONENT STK. CONT. NO.	DESCRIPTION	QUANTITY	UM	MFR. NAME	MFR. PART/ASSY. NO.
R 114	616-02-00000	RES,*TVAR*	AR	EA	FWSI	00000
R 115	608-09-64901	RES, 64.9K 1% 1/10W	1	EA	FWSI	624
U 001	046-97-00209	IC,LIN AMPL,OPNL HS SLEW	1	EA	HAS/MML	HA2-2525-5
U 002	046-97-00209	IC,LIN AMPL,OPNL HS SLEW	1	EA	HAS/MML	HA2-2525-5
?C 026	305-20-12600	CAP. 1260PF 1% 500V	1	EA	FWSI	600
?C 035	305-20-12600	CAP. 1260PF 1% 500V	1	EA	FWSI	600
?R 055	608-09-86600	RES, 8.66K 1% 1/10W	1	EA	EMR	624
?R 116	608-09-86600	RES, 8.66K 1% 1/10W	1	EA	EMR	624
REF001	905-01-00539	SCHEMATIC,PWA	AR	EA	FWSI	17394
REF002	905-04-00002	SPEC,COMPONENT SPACING	AR	EA	FWSI	9500-1

END OF LIST

DATE 05/09/85 FAIRCHILD WESTON INC. CODE IDENT. 06141 PAGE 1

PARTS LIST: 21777 MFR. NAME: FWSI PARENT STK. CONT. NO.: 205-89-01014

DESCRIPTION: PWA, DETECTOR SWITCHES STD UM: EA ECO NO.: RCD01 ENG. REV.: *B

ITEM NO.	COMPONENT STK. CONT. NO.	DESCRIPTION	QUANTITY	UM	MFR. NAME	MFR. PART/ASSY. NO.
001	204-89-00378	PWB,DETECTOR SWITCHES	1	EA	FWSI	21776
002	189-98-00004	PAD,XSTR 4 PIN*USE OPTL*	1	EA	DEL BLINN	100-000-NY
CR001	088-99-00099	DIODE,ZENER, 3.3V,IN746A	1	EA	FWSI/MML	642-00
CR002	088-19-00029	DIO,4 PELLET 90V VF 2.47V	1	EA	FWSI/MML	23200
CR003	088-19-00029	DIO,4 PELLET 90V VF 2.47V	1	EA	FWSI/MML	23200
CR004	088-19-00029	DIO,4 PELLET 90V VF 2.47V	1	EA	FWSI/MML	23200
CR005	088-19-00029	DIO,4 PELLET 90V VF 2.47V	1	EA	FWSI/MML	23200
CR006	088-99-00099	DIODE,ZENER, 3.3V,IN746A	1	EA	FWSI/MML	642-00
Q 001	263-97-00093	XSTR,PNP,SWITCH/AMPL,50V	1	EA	FCH/MML	2N3251
R 001	608-09-16901	RES, 16.9K 1% 1/10W	1	EA	FWSI	624
R 002	608-09-00000	RES,*TVAR* 1%,1/10W	AR	EA	FWSI	624
R 003	608-09-75001	RES, 75.0K 1% 1/10W	1	EA	EMR	624
R 004	616-02-10001	RES,10K 5% 1/4W	1	EA	ALLEN BRAD	RC07GF103J
R 005	616-02-10001	RES,10K 5% 1/4W	1	EA	ALLEN BRAD	RC07GF103J
R 006	608-09-75001	RES, 75.0K 1% 1/10W	1	EA	EMR	624
R 007	608-09-15801	RES, 15.8K 1% 1/10W	1	EA	EMR	624
R 008	616-02-47000	RES,4.7K 5% 1/4W	1	EA	ALLEN BRAD	RC07GF472J
R 009	608-09-80600	RES, 8.06K 1% 1/10W	1	EA	EMR	624
R 010	608-09-49909	RES, 499.0 OHM 1% 1/10W	1	EA	FWSI	624
R 011	608-09-49909	RES, 499.0 OHM 1% 1/10W	1	EA	FWSI	624
R 012	608-09-49909	RES, 499.0 OHM 1% 1/10W	1	EA	FWSI	624
R 013	608-09-49909	RES, 499.0 OHM 1% 1/10W	1	EA	FWSI	624
U 001	046-99-00002	IC,LIN DIFF PR,TEMP-CONT	1	EA	FWSI	22512
U 002	046-99-00002	IC,LIN DIFF PR,TEMP-CONT	1	EA	FWSI	22512
REF001	905-01-00716	SCHEMATIC, PWB	AR	EA	FWSI	21775
REF002	905-04-00001	SPEC,COMPONENT SPACING	AR	EA	FWSI	9500

END OF LIST

PARTS LIST: 16657-3 MFR. NAME: FWSI PARENT STK. CONT. NO.: 205-89-00715

DESCRIPTION: PWA,POLE PAIR UM: EA ECO NO.: 0401067 ENG. REV.: FC

4142-86

ITEM NO.	COMPONENT STK. CONT. NO.	DESCRIPTION	QUANTITY	UM	MFR. NAME	MFR. PART/ASSY. NO.
001	204-99-00506	PWB,POLE PAIR	1	EA	FWSI	16656
002	299-99-00010	EJCTR,CARD,.062BD,POSN10	2	EA	FWSI	6477-9
003	071-98-00060	CORE,BEAD EMI/RFI SUPRESR	4	EA	FCC/STPL	56-590-65/3B;57-0180
004	189-98-00011	PAD,XSTR,TO-5 8PIN,.075H	2	EA	MILTON ROSS	10193-DAP
C 001	707-01-49603	CAP., 4.96MF 1% 50V	1	EA	FWSI	904
C 002	707-01-34803	CAP., 3.48MF 1% 50V	1	EA	FWSI	904
C 003	707-01-49502	CAP., .495MF 1% 50V	1	EA	FWSI	904
C 004	707-01-34802	CAP., .348MF 1% 50V	1	EA	FWSI	904
C 005	707-01-49601	CAP., .0496MF 1% 50V	1	EA	FWSI	904
C 006	707-01-34801	CAP., .0348MF 1% 50V	1	EA	FWSI	904
C 007	305-20-47000	CAP. 4700PF 1% 500V	1	EA	FWSI	600
C 008	305-20-33000	CAP. 3300PF 1% 500V	1	EA	FWSI	600
C 009	304-20-36009	CAP. 360PF 1% 500V	1	EA	FWSI	600
C 010	304-20-22009	CAP. 220PF 1% 500V	1	EA	FWSI	600
C 011	707-01-15303	CAP., 1.53MF 1% 50V	1	EA	FWSI	904
C 012	707-01-99102	CAP., .991MF 1% 50V	1	EA	FWSI	904
C 013	707-01-15302	CAP., .153MF 1% 50V	1	EA	FWSI	904
C 014	707-01-98701	CAP., .0987MF 1% 50V	1	EA	FWSI	904
C 015	707-01-15301	CAP., .0153MF 1% 50V	1	EA	FWSI	904
C 016	707-01-97700	CAP., .00977MF 1% 50V	1	EA	FWSI	904
C 017	305-20-15000	CAP. 1500PF 1% 500V	1	EA	FWSI	600
C 018	304-41-82009	CAP. 820PF 1% 300V	1	EA	FWSI	600
C 019	304-20-11009	CAP. 110PF 1% 500V	1	EA	FWSI	600
C 020	304-13-05609	CAP. 56PF 1% 500V	1	EA	FWSI	600
C 021	301-13-10002	CAP,CR , 50V .100 UF 20%	1	EA	ERIE/MML	8131-050-651-104M
C 023	301-13-10002	CAP,CR , 50V .100 UF 20%	1	EA	ERIE/MML	8131-050-651-104M
C 024	337-14-68003	CAP. 6.8MF 10% 35V	1	EA	FWSI	601
C 025	301-13-10002	CAP,CR , 50V .100 UF 20%	1	EA	ERIE/MML	8131-050-651-104M
C 027	301-13-10002	CAP,CR , 50V .100 UF 20%	1	EA	ERIE/MML	8131-050-651-104M
C 028	337-14-68003	CAP. 6.8MF 10% 35V	1	EA	FWSI	601
C 029	337-14-68003	CAP. 6.8MF 10% 35V	1	EA	FWSI	601
C 030	304-20-16009	CAP. 160PF 1% 500V	1	EA	FWSI	600
C 031	304-13-08209	CAP. 82PF 1% 500V	1	EA	FWSI	600
C 032	304-20-12009	CAP. 120PF 1% 500V	1	EA	FWSI	600
C 033	304-13-06809	CAP. 68PF 1% 500V	1	EA	FWSI	600
CR001	088-10-41480	DIODE,SW,75V/5UA,4NS/10MA	1	EA	CODI/MML	1N4148
CR002	088-10-41480	DIODE,SW,75V/5UA,4NS/10MA	1	EA	CODI/MML	1N4148
CR003	088-10-41480	DIODE,SW,75V/5UA,4NS/10MA	1	EA	CODI/MML	1N4148
CR004	088-10-41480	DIODE,SW,75V/5UA,4NS/10MA	1	EA	CODI/MML	1N4148
CR005	088-10-41480	DIODE,SW,75V/5UA,4NS/10MA	1	EA	CODI/MML	1N4148
CR006	088-10-41480	DIODE,SW,75V/5UA,4NS/10MA	1	EA	CODI/MML	1N4148

CONTINUED

PARTS LIST: 16657-3 MFR. NAME: FWSI PARENT STK. CONT. NO.: 205-89-00715

DESCRIPTION: PWA,POLE PAIR UM: EA ECO NO.: 0401067 ENG. REV.: FC

4142-86

ITEM NO.	COMPONENT STK. CONT. NO.	DESCRIPTION	QUANTITY	UM	MFR. NAME	MFR. PART/ASSY. NO.
CR007	088-10-41480	DIODE,SW,75V/5UA,4NS/10MA	1	EA	CODI/MML	1N4148
CR008	088-10-41480	DIODE,SW,75V/5UA,4NS/10MA	1	EA	CODI/MML	1N4148
CR009	088-10-41480	DIODE,SW,75V/5UA,4NS/10MA	1	EA	CODI/MML	1N4148
CR010	088-10-41480	DIODE,SW,75V/5UA,4NS/10MA	1	EA	CODI/MML	1N4148
CR011	088-10-41480	DIODE,SW,75V/5UA,4NS/10MA	1	EA	CODI/MML	1N4148
CR012	088-10-41480	DIODE,SW,75V/5UA,4NS/10MA	1	EA	CODI/MML	1N4148
CR013	088-10-41480	DIODE,SW,75V/5UA,4NS/10MA	1	EA	CODI/MML	1N4148
CR014	088-10-41480	DIODE,SW,75V/5UA,4NS/10MA	1	EA	CODI/MML	1N4148
CR015	088-10-41480	DIODE,SW,75V/5UA,4NS/10MA	1	EA	CODI/MML	1N4148
CR016	088-10-41480	DIODE,SW,75V/5UA,4NS/10MA	1	EA	CODI/MML	1N4148
CR017	088-10-41480	DIODE,SW,75V/5UA,4NS/10MA	1	EA	CODI/MML	1N4148
CR018	088-10-41480	DIODE,SW,75V/5UA,4NS/10MA	1	EA	CODI/MML	1N4148
CR019	088-10-41480	DIODE,SW,75V/5UA,4NS/10MA	1	EA	CODI/MML	1N4148
K 001	219-99-00028	RELAY,2 FORM A,GOLD CONT	1	EA	FWSI/MML	28531-21
K 002	219-99-00028	RELAY,2 FORM A,GOLD CONT	1	EA	FWSI/MML	28531-21
K 003	219-99-00028	RELAY,2 FORM A,GOLD CONT	1	EA	FWSI/MML	28531-21
K 004	219-99-00028	RELAY,2 FORM A,GOLD CONT	1	EA	FWSI/MML	28531-21
K 005	219-99-00028	RELAY,2 FORM A,GOLD CONT	1	EA	FWSI/MML	28531-21
K 006	219-99-00028	RELAY,2 FORM A,GOLD CONT	1	EA	FWSI/MML	28531-21
K 007	219-99-00028	RELAY,2 FORM A,GOLD CONT	1	EA	FWSI/MML	28531-21
K 008	219-99-00028	RELAY,2 FORM A,GOLD CONT	1	EA	FWSI/MML	28531-21
K 009	219-99-00028	RELAY,2 FORM A,GOLD CONT	1	EA	FWSI/MML	28531-21
K 010	219-99-00023	RELAY,4 FORM A,RHOD CONT	1	EA	FWSI/MML	28531-16
K 011	219-99-00023	RELAY,4 FORM A,RHOD CONT	1	EA	FWSI/MML	28531-16
K 012	219-99-00023	RELAY,4 FORM A,RHOD CONT	1	EA	FWSI/MML	28531-16
K 013	219-99-00023	RELAY,4 FORM A,RHOD CONT	1	EA	FWSI/MML	28531-16
K 014	219-99-00023	RELAY,4 FORM A,RHOD CONT	1	EA	FWSI/MML	28531-16
K 015	219-99-00019	RELAY,2 FORM C,GOLD CONT	1	EA	FWSI/MML	28531-12
R 001	605-09-10002	RES. 100K 1% 1/8W	1	EA	FWSI	625
R 002	605-09-49901	RES. 49.9K 1% 1/8W	1	EA	FWSI	625
R 003	605-09-24901	RES. 24.9K 1% 1/8W	1	EA	FWSI	625
R 004	605-09-12401	RES. 12.4K 1% 1/8W	1	EA	FWSI	625
R 005	605-09-12401	RES. 12.4K 1% 1/8W	1	EA	FWSI	625
R 006	605-09-12701	RES. 12.7K 1% 1/8W	1	EA	FWSI	625
R 007	605-09-49900	RES. 4.99K 1% 1/8W	1	EA	FWSI	625
R 008	605-09-24900	RES. 2.49K 1% 1/8W	1	EA	FWSI	625
R 009	605-09-12400	RES. 1.24K 1% 1/8W	1	EA	FWSI	625
R 010	605-09-12400	RES. 1.24K 1% 1/8W	1	EA	FWSI	625
R 011	605-09-12700	RES. 1.27K 1% 1/8W	1	EA	FWSI	625
R 012	616-02-01009	RES,10 OHM 5% 1/4W	1	EA	ALLEN BRAD	RC07GF100J
R 013	616-02-10009	RES,100 OHM 5% 1/4W	1	EA	ALLEN BRAD	RC07GF101J

CONTINUED

PARTS LIST: 16657-3 MFR. NAME: FWSI PARENT STK. CONT. NO.: 205-89-00715

DESCRIPTION: PWA,POLE PAIR UM: EA ECO NO.: 0401067 ENG. REV.: FC

4142-86

ITEM NO.	COMPONENT STK. CONT. NO.	DESCRIPTION	QUANTITY	UM	MFR. NAME	MFR. PART/ASSY. NO.
R 015	616-02-51000	RES,5.1K 5% 1/4W	1	EA	ALLEN BRAD	RC07GF512J
R 016	616-02-10009	RES,100 OHM 5% 1/4W	1	EA	ALLEN BRAD	RC07GF101J
R 017	605-09-10002	RES. 100K 1% 1/8W	1	EA	FWSI	625
R 018	605-09-49901	RES. 49.9K 1% 1/8W	1	EA	FWSI	625
R 019	605-09-24901	RES. 24.9K 1% 1/8W	1	EA	FWSI	625
R 020	605-09-12401	RES. 12.4K 1% 1/8W	1	EA	FWSI	625
R 021	605-09-12401	RES. 12.4K 1% 1/8W	1	EA	FWSI	625
R 022	605-09-12701	RES. 12.7K 1% 1/8W	1	EA	FWSI	625
R 023	605-09-49900	RES. 4.99K 1% 1/8W	1	EA	FWSI	625
R 024	605-09-24900	RES. 2.49K 1% 1/8W	1	EA	FWSI	625
R 025	605-09-12400	RES. 1.24K 1% 1/8W	1	EA	FWSI	625
R 026	605-09-12400	RES. 1.24K 1% 1/8W	1	EA	FWSI	625
R 027	605-09-12700	RES. 1.27K 1% 1/8W	1	EA	FWSI	625
R 028	616-02-10009	RES,100 OHM 5% 1/4W	1	EA	ALLEN BRAD	RC07GF101J
R 029	201-98-00295	POT,TRMR,1.0 K 10% .75W	1	EA	BECK/MML	89PR1K
R 030	616-02-51000	RES,5.1K 5% 1/4W	1	EA	ALLEN BRAD	RC07GF512J
R 031	616-02-10009	RES,100 OHM 5% 1/4W	1	EA	ALLEN BRAD	RC07GF101J
R 032	616-02-01009	RES,10 OHM 5% 1/4W	1	EA	ALLEN BRAD	RC07GF100J
R 033	616-02-01009	RES,10 OHM 5% 1/4W	1	EA	ALLEN BRAD	RC07GF100J
R 035	616-02-10002	RES,100K 5% 1/4W	1	EA	ALLEN BRAD	RC07GF104J
TP001	143-98-00017	JACK,TEST PT,PW TYPE,RED	1	EA	AMP INC.	3-582340-2
TP002	143-98-00017	JACK,TEST PT,PW TYPE,RED	1	EA	AMP INC.	3-582340-2
TP003	143-98-00017	JACK,TEST PT,PW TYPE,RED	1	EA	AMP INC.	3-582340-2
U 001	046-34-00014	IC,LIN VOLTAGE FOLLOWER	1	EA	NSC/MML	LM310H
U 002	046-34-00014	IC,LIN VOLTAGE FOLLOWER	1	EA	NSC/MML	LM310H
REF001	905-01-00540	SCHEMATIC,PWA	AR	EA	FWSI	16655
REF002	905-04-00002	SPEC,COMPONENT SPACING	AR	EA	FWSI	9500-1

END OF LIST

PARTS LIST: 16657-4 MFR. NAME: FWSI PARENT STK. CONT. NO.: 205-89-00716

DESCRIPTION: PWA,POLE PAIR UM: EA ECO NO.: 0401067 ENG. REV.: EC

4142-86

ITEM NO.	COMPONENT STK. CONT. NO.	DESCRIPTION	QUANTITY	UM	MFR. NAME	MFR. PART/ASSY. NO.
001	204-99-00506	PWB,POLE PAIR	1	EA	FWSI	16656
002	299-99-00011	EJCTR,CARD,.062BD,POSN11	2	EA	FWSI	6477-10
003	071-98-00060	CORE,BEAD EMI/RFI SUPRESR	4	EA	FCC/STPL	56-590-65/3B;57-0180
004	189-98-00011	PAD,XSTR,TO-5 8PIN,.075H	2	EA	MILTON ROSS	10193-DAP
C 001	707-01-34203	CAP., 3.42MF 1% 50V	1	EA	FWSI	904
C 002	707-01-26403	CAP., 2.64MF 1% 50V	1	EA	FWSI	904
C 003	707-01-34202	CAP., .342MF 1% 50V	1	EA	FWSI	904
C 004	707-01-26402	CAP., .264MF 1% 50V	1	EA	FWSI	904
C 005	707-01-34201	CAP., .0342MF 1% 50V	1	EA	FWSI	904
C 006	707-01-26401	CAP., .0264MF 1% 50V	1	EA	FWSI	904
C 007	305-20-33000	CAP. 3300PF 1% 500V	1	EA	FWSI	600
C 008	305-20-22000	CAP. 2200PF 1% 500V	1	EA	FWSI	600
C 009	304-20-22009	CAP. 220PF 1% 500V	1	EA	FWSI	600
C 010	304-20-15009	CAP. 150PF 1% 500V	1	EA	FWSI	600
C 011	707-01-22203	CAP., 2.22MF 1% 50V	1	EA	FWSI	904
C 012	707-01-11503	CAP., 1.15MF 1% 50V	1	EA	FWSI	904
C 013	707-01-22202	CAP., .222MF 1% 50V	1	EA	FWSI	904
C 014	707-01-11502	CAP., .115MF 1% 50V	1	EA	FWSI	904
C 015	707-01-22201	CAP., .0222MF 1% 50V	1	EA	FWSI	904
C 016	707-01-11501	CAP., .0115MF 1% 50V	1	EA	FWSI	904
C 017	305-20-22000	CAP. 2200PF 1% 500V	1	EA	FWSI	600
C 018	304-62-10000	CAP. 1000PF 1% 100V	1	EA	FWSI	600
C 019	304-20-20009	CAP. 200PF 1% 500V	1	EA	FWSI	600
C 020	304-13-08209	CAP. 82PF 1% 500V	1	EA	FWSI	600
C 021	301-13-10002	CAP,CR , 50V .100 UF 20%	1	EA	ERIE/MML	8131-050-651-104M
C 023	301-13-10002	CAP,CR , 50V .100 UF 20%	1	EA	ERIE/MML	8131-050-651-104M
C 024	337-14-68003	CAP. 6.8MF 10% 35V	1	EA	FWSI	601
C 025	301-13-10002	CAP,CR , 50V .100 UF 20%	1	EA	ERIE/MML	8131-050-651-104M
C 027	301-13-10002	CAP,CR , 50V .100 UF 20%	1	EA	ERIE/MML	8131-050-651-104M
C 028	337-14-68003	CAP. 6.8MF 10% 35V	1	EA	FWSI	601
C 029	337-14-68003	CAP. 6.8MF 10% 35V	1	EA	FWSI	601
C 031	304-20-33009	CAP. 330PF 1% 500V	1	EA	FWSI	600
C 032	304-13-06809	CAP. 68PF 1% 500V	1	EA	FWSI	600
C 033	304-13-05009	CAP. 50PF 1% 500V	1	EA	FWSI	600
CR001	088-10-41480	DIODE,SW,75V/5UA,4NS/10MA	1	EA	CODI/MML	1N4148
CR002	088-10-41480	DIODE,SW,75V/5UA,4NS/10MA	1	EA	CODI/MML	1N4148
CR003	088-10-41480	DIODE,SW,75V/5UA,4NS/10MA	1	EA	CODI/MML	1N4148
CR004	088-10-41480	DIODE,SW,75V/5UA,4NS/10MA	1	EA	CODI/MML	1N4148
CR005	088-10-41480	DIODE,SW,75V/5UA,4NS/10MA	1	EA	CODI/MML	1N4148
CR006	088-10-41480	DIODE,SW,75V/5UA,4NS/10MA	1	EA	CODI/MML	1N4148
CR007	088-10-41480	DIODE,SW,75V/5UA,4NS/10MA	1	EA	CODI/MML	1N4148

CONTINUED

PARTS LIST: 16657-4 MFR. NAME: FWSI PARENT STK. CONT. NO.: 205-89-00716

DESCRIPTION: PWA,POLE PAIR UM: EA ECO NO.: 0401067 ENG. REV.: EC
4142-86

ITEM NO.	COMPONENT STK. CONT. NO.	DESCRIPTION	QUANTITY	UM	MFR. NAME	MFR. PART/ASSY. NO.
CR008	088-10-41480	DIODE,SW,75V/5UA,4NS/10MA	1	EA	CODI/MML	1N4148
CR009	088-10-41480	DIODE,SW,75V/5UA,4NS/10MA	1	EA	CODI/MML	1N4148
CR010	088-10-41480	DIODE,SW,75V/5UA,4NS/10MA	1	EA	CODI/MML	1N4148
CR011	088-10-41480	DIODE,SW,75V/5UA,4NS/10MA	1	EA	CODI/MML	1N4148
CR012	088-10-41480	DIODE,SW,75V/5UA,4NS/10MA	1	EA	CODI/MML	1N4148
CR013	088-10-41480	DIODE,SW,75V/5UA,4NS/10MA	1	EA	CODI/MML	1N4148
CR014	088-10-41480	DIODE,SW,75V/5UA,4NS/10MA	1	EA	CODI/MML	1N4148
CR015	088-10-41480	DIODE,SW,75V/5UA,4NS/10MA	1	EA	CODI/MML	1N4148
CR016	088-10-41480	DIODE,SW,75V/5UA,4NS/10MA	1	EA	CODI/MML	1N4148
CR017	088-10-41480	DIODE,SW,75V/5UA,4NS/10MA	1	EA	CODI/MML	1N4148
CR018	088-10-41480	DIODE,SW,75V/5UA,4NS/10MA	1	EA	CODI/MML	1N4148
CR019	088-10-41480	DIODE,SW,75V/5UA,4NS/10MA	1	EA	CODI/MML	1N4148
K 001	219-99-00028	RELAY,2 FORM A,GOLD CONT	1	EA	FWSI/MML	28531-21
K 002	219-99-00028	RELAY,2 FORM A,GOLD CONT	1	EA	FWSI/MML	28531-21
K 003	219-99-00028	RELAY,2 FORM A,GOLD CONT	1	EA	FWSI/MML	28531-21
K 004	219-99-00028	RELAY,2 FORM A,GOLD CONT	1	EA	FWSI/MML	28531-21
K 005	219-99-00028	RELAY,2 FORM A,GOLD CONT	1	EA	FWSI/MML	28531-21
K 006	219-99-00028	RELAY,2 FORM A,GOLD CONT	1	EA	FWSI/MML	28531-21
K 007	219-99-00028	RELAY,2 FORM A,GOLD CONT	1	EA	FWSI/MML	28531-21
K 008	219-99-00028	RELAY,2 FORM A,GOLD CONT	1	EA	FWSI/MML	28531-21
K 009	219-99-00028	RELAY,2 FORM A,GOLD CONT	1	EA	FWSI/MML	28531-21
K 010	219-99-00023	RELAY,4 FORM A,RHOD CONT	1	EA	FWSI/MML	28531-16
K 011	219-99-00023	RELAY,4 FORM A,RHOD CONT	1	EA	FWSI/MML	28531-16
K 012	219-99-00023	RELAY,4 FORM A,RHOD CONT	1	EA	FWSI/MML	28531-16
K 013	219-99-00023	RELAY,4 FORM A,RHOD CONT	1	EA	FWSI/MML	28531-16
K 014	219-99-00023	RELAY,4 FORM A,RHOD CONT	1	EA	FWSI/MML	28531-16
K 015	219-99-00019	RELAY,2 FORM C,GOLD CONT	1	EA	FWSI/MML	28531-12
R 001	605-09-10002	RES. 100K 1% 1/8W	1	EA	FWSI	625
R 002	605-09-49901	RES. 49.9K 1% 1/8W	1	EA	FWSI	625
R 003	605-09-24901	RES. 24.9K 1% 1/8W	1	EA	FWSI	625
R 004	605-09-12401	RES. 12.4K 1% 1/8W	1	EA	FWSI	625
R 005	605-09-12401	RES. 12.4K 1% 1/8W	1	EA	FWSI	625
R 006	605-09-12701	RES. 12.7K 1% 1/8W	1	EA	FWSI	625
R 007	605-09-49900	RES. 4.99K 1% 1/8W	1	EA	FWSI	625
R 008	605-09-24900	RES. 2.49K 1% 1/8W	1	EA	FWSI	625
R 009	605-09-12400	RES. 1.24K 1% 1/8W	1	EA	FWSI	625
R 010	605-09-12400	RES. 1.24K 1% 1/8W	1	EA	FWSI	625
R 011	605-09-12700	RES. 1.27K 1% 1/8W	1	EA	FWSI	625
R 012	616-02-01009	RES,10 OHM 5% 1/4W	1	EA	ALLEN BRAD	RC07GF100J
R 013	616-02-10009	RES,100 OHM 5% 1/4W	1	EA	ALLEN BRAD	RC07GF101J
R 015	616-02-51000	RES,5.1K 5% 1/4W	1	EA	ALLEN BRAD	RC07GF512J

CONTINUED

PARTS LIST: 16657-4 MFR. NAME: FWSI PARENT STK. CONT. NO.: 205-89-00716

DESCRIPTION: PWA,POLE PAIR UM: EA ECO NO.: 0401067 ENG. REV.: EC
4142-86

ITEM NO.	COMPONENT STK. CONT. NO.	DESCRIPTION	QUANTITY	UM	MFR. NAME	MFR. PART/ASSY. NO.
R 016	616-02-10009	RES,100 OHM 5% 1/4W	1	EA	ALLEN BRAD	RC07GF101J
R 017	605-09-10002	RES. 100K 1% 1/8W	1	EA	FWSI	625
R 018	605-09-49901	RES. 49.9K 1% 1/8W	1	EA	FWSI	625
R 019	605-09-24901	RES. 24.9K 1% 1/8W	1	EA	FWSI	625
R 020	605-09-12401	RES. 12.4K 1% 1/8W	1	EA	FWSI	625
R 021	605-09-12401	RES. 12.4K 1% 1/8W	1	EA	FWSI	625
R 022	605-09-12701	RES. 12.7K 1% 1/8W	1	EA	FWSI	625
R 023	605-09-49900	RES. 4.99K 1% 1/8W	1	EA	FWSI	625
R 024	605-09-24900	RES. 2.49K 1% 1/8W	1	EA	FWSI	625
R 025	605-09-12400	RES. 1.24K 1% 1/8W	1	EA	FWSI	625
R 026	605-09-12400	RES. 1.24K 1% 1/8W	1	EA	FWSI	625
R 027	605-09-12700	RES. 1.27K 1% 1/8W	1	EA	FWSI	625
R 028	616-02-10009	RES,100 OHM 5% 1/4W	1	EA	ALLEN BRAD	RC07GF101J
R 029	201-98-00295	POT,TRMR,1.0 K 10% .75W	1	EA	BECK/MML	89PR1K
R 030	616-02-51000	RES,5.1K 5% 1/4W	1	EA	ALLEN BRAD	RC07GF512J
R 031	616-02-10009	RES,100 OHM 5% 1/4W	1	EA	ALLEN BRAD	RC07GF101J
R 032	616-02-01009	RES,10 OHM 5% 1/4W	1	EA	ALLEN BRAD	RC07GF100J
R 033	616-02-01009	RES,10 OHM 5% 1/4W	1	EA	ALLEN BRAD	RC07GF100J
R 035	616-02-10002	RES,100K 5% 1/4W	1	EA	ALLEN BRAD	RC07GF104J
TP001	143-98-00017	JACK,TEST PT,PW TYPE,RED	1	EA	AMP INC.	3-582340-2
TP002	143-98-00017	JACK,TEST PT,PW TYPE,RED	1	EA	AMP INC.	3-582340-2
TP003	143-98-00017	JACK,TEST PT,PW TYPE,RED	1	EA	AMP INC.	3-582340-2
U 001	046-34-00014	IC,LIN VOLTAGE FOLLOWER	1	EA	NSC/MML	LM310H
U 002	046-34-00014	IC,LIN VOLTAGE FOLLOWER	1	EA	NSC/MML	LM310H
REF001	905-01-00540	SCHEMATIC,PWA	AR	EA	FWSI	16655
REF002	905-04-00002	SPEC,COMPONENT SPACING	AR	EA	FWSI	9500-1

END OF LIST

PARTS LIST: 16657-1 MFR. NAME: FWSI PARENT STK. CONT. NO.: 205-89-00713

DESCRIPTION: PWA,POLE PAIR UM: EA ECO NO.: 0401067 ENG. REV.: HC

4142-84

ITEM NO.	COMPONENT STK. CONT. NO.	DESCRIPTION	QUANTITY	UM	MFR. NAME	MFR. PART/ASSY. NO.
001	204-99-00506	PWB,POLE PAIR	1	EA	FWSI	16656
002	299-99-00011	EJCTR,CARD,.062BD,POSN11	2	EA	FWSI	6477-10
003	071-98-00060	CORE,BEAD EMI/RFI SUPRESR	4	EA	FCC/STPL	56-590-65/3B;57-0180
004	189-98-00011	PAD,XSTR,TO-5 8PIN,.075H	2	EA	MILTON ROSS	10193-DAP
C 001	707-01-41803	CAP., 4.18MF 1% 50V	1	EA	FWSI	904
C 002	707-01-36353	CAP., 3.635MF 1% 50V	1	EA	FWSI	904
C 003	707-01-41802	CAP., .418MF 1% 50V	1	EA	FWSI	904
C 004	707-01-36352	CAP., .3635MF 1% 50V	1	EA	FWSI	904
C 005	707-01-41801	CAP., .0418 1% 50V	1	EA	FWSI	904
C 006	707-01-36351	CAP., .03635MF 1% 50V	1	EA	FWSI	904
C 007	305-20-39000	CAP. 3900PF 1% 500V	1	EA	FWSI	600
C 008	305-20-33000	CAP. 3300PF 1% 500V	1	EA	FWSI	600
C 009	304-20-26009	CAP. 260PF 1% 500V	1	EA	FWSI	600
C 010	304-20-27009	CAP. 270PF 1% 500V	1	EA	FWSI	600
C 011	707-01-15903	CAP., 1.59MF 1% 50V	1	EA	FWSI	904
C 012	707-01-11503	CAP., 1.15MF 1% 50V	1	EA	FWSI	904
C 013	707-01-15902	CAP., .159MF 1% 50V	1	EA	FWSI	904
C 014	707-01-11502	CAP., .115MF 1% 50V	1	EA	FWSI	904
C 015	707-01-15901	CAP., .0159MF 1% 50V	1	EA	FWSI	904
C 016	707-01-11501	CAP., .0115MF 1% 50V	1	EA	FWSI	904
C 017	305-20-13000	CAP. 1300PF 1% 500V	1	EA	FWSI	600
C 018	305-20-10000	CAP., 1000PF 1% NON-STD	1	EA	FWSI	600
C 020	304-20-10009	CAP. 100PF 1% 500V	1	EA	FWSI	600
C 021	301-13-10002	CAP,CR , 50V .100 UF 20%	1	EA	ERIE/MML	8131-050-651-104M
C 023	301-13-10002	CAP,CR , 50V .100 UF 20%	1	EA	ERIE/MML	8131-050-651-104M
C 024	337-14-68003	CAP. 6.8MF 10% 35V	1	EA	FWSI	601
C 025	301-13-10002	CAP,CR , 50V .100 UF 20%	1	EA	ERIE/MML	8131-050-651-104M
C 027	301-13-10002	CAP,CR , 50V .100 UF 20%	1	EA	ERIE/MML	8131-050-651-104M
C 028	337-14-68003	CAP. 6.8MF 10% 35V	1	EA	FWSI	601
C 029	337-14-68003	CAP. 6.8MF 10% 35V	1	EA	FWSI	601
C 030	304-20-27009	CAP. 270PF 1% 500V	1	EA	FWSI	600
C 031	304-20-24009	CAP. 240PF 1% 500V	1	EA	FWSI	600
C 032	304-20-16009	CAP. 160PF 1% 500V	1	EA	FWSI	600
C 033	304-01-01009	CAP. 10PF .5PF 500V	1	EA	FWSI	600
C 034	304-08-04709	CAP. 47PF .5PF 500V	1	EA	FWSI	600
C 035	304-01-00409	CAP. 4PF .5PF 500V	1	EA	FWSI	600
C 036	304-20-14009	CAP. 140PF 1% 500V	1	EA	FWSI	600
C 037	304-01-00809	CAP. 8PF .5PF 500V	1	EA	FWSI	600
CR001	088-10-41480	DIODE,SW,75V/5UA,4NS/10MA	1	EA	CODI/MML	1N4148
CR002	088-10-41480	DIODE,SW,75V/5UA,4NS/10MA	1	EA	CODI/MML	1N4148
CR003	088-10-41480	DIODE,SW,75V/5UA,4NS/10MA	1	EA	CODI/MML	1N4148

CONTINUED

PARTS LIST: 16657-1 MFR. NAME: FWSI PARENT STK. CONT. NO.: 205-89-00713

DESCRIPTION: PWA,POLE PAIR UM: EA ECO NO.: 0401067 ENG. REV.: HC

4142-84

ITEM NO.	COMPONENT STK. CONT. NO.	DESCRIPTION	QUANTITY	UM	MFR. NAME	MFR. PART/ASSY. NO.
CR004	088-10-41480	DIODE,SW,75V/5UA,4NS/10MA	1	EA	CODI/MML	1N4148
CR005	088-10-41480	DIODE,SW,75V/5UA,4NS/10MA	1	EA	CODI/MML	1N4148
CR006	088-10-41480	DIODE,SW,75V/5UA,4NS/10MA	1	EA	CODI/MML	1N4148
CR007	088-10-41480	DIODE,SW,75V/5UA,4NS/10MA	1	EA	CODI/MML	1N4148
CR008	088-10-41480	DIODE,SW,75V/5UA,4NS/10MA	1	EA	CODI/MML	1N4148
CR009	088-10-41480	DIODE,SW,75V/5UA,4NS/10MA	1	EA	CODI/MML	1N4148
CR010	088-10-41480	DIODE,SW,75V/5UA,4NS/10MA	1	EA	CODI/MML	1N4148
CR011	088-10-41480	DIODE,SW,75V/5UA,4NS/10MA	1	EA	CODI/MML	1N4148
CR012	088-10-41480	DIODE,SW,75V/5UA,4NS/10MA	1	EA	CODI/MML	1N4148
CR013	088-10-41480	DIODE,SW,75V/5UA,4NS/10MA	1	EA	CODI/MML	1N4148
CR014	088-10-41480	DIODE,SW,75V/5UA,4NS/10MA	1	EA	CODI/MML	1N4148
CR015	088-10-41480	DIODE,SW,75V/5UA,4NS/10MA	1	EA	CODI/MML	1N4148
CR016	088-10-41480	DIODE,SW,75V/5UA,4NS/10MA	1	EA	CODI/MML	1N4148
CR017	088-10-41480	DIODE,SW,75V/5UA,4NS/10MA	1	EA	CODI/MML	1N4148
CR018	088-10-41480	DIODE,SW,75V/5UA,4NS/10MA	1	EA	CODI/MML	1N4148
CR019	088-10-41480	DIODE,SW,75V/5UA,4NS/10MA	1	EA	CODI/MML	1N4148
K 001	219-99-00028	RELAY,2 FORM A,GOLD CONT	1	EA	FWSI/MML	28531-21
K 002	219-99-00028	RELAY,2 FORM A,GOLD CONT	1	EA	FWSI/MML	28531-21
K 003	219-99-00028	RELAY,2 FORM A,GOLD CONT	1	EA	FWSI/MML	28531-21
K 004	219-99-00028	RELAY,2 FORM A,GOLD CONT	1	EA	FWSI/MML	28531-21
K 005	219-99-00028	RELAY,2 FORM A,GOLD CONT	1	EA	FWSI/MML	28531-21
K 006	219-99-00028	RELAY,2 FORM A,GOLD CONT	1	EA	FWSI/MML	28531-21
K 007	219-99-00028	RELAY,2 FORM A,GOLD CONT	1	EA	FWSI/MML	28531-21
K 008	219-99-00028	RELAY,2 FORM A,GOLD CONT	1	EA	FWSI/MML	28531-21
K 009	219-99-00028	RELAY,2 FORM A,GOLD CONT	1	EA	FWSI/MML	28531-21
K 010	219-99-00023	RELAY,4 FORM A,RHOD CONT	1	EA	FWSI/MML	28531-16
K 011	219-99-00023	RELAY,4 FORM A,RHOD CONT	1	EA	FWSI/MML	28531-16
K 012	219-99-00023	RELAY,4 FORM A,RHOD CONT	1	EA	FWSI/MML	28531-16
K 013	219-99-00023	RELAY,4 FORM A,RHOD CONT	1	EA	FWSI/MML	28531-16
K 014	219-99-00023	RELAY,4 FORM A,RHOD CONT	1	EA	FWSI/MML	28531-16
K 015	219-99-00019	RELAY,2 FORM C,GOLD CONT	1	EA	FWSI/MML	28531-12
R 001	605-09-10002	RES. 100K 1% 1/8W	1	EA	FWSI	625
R 002	605-09-49901	RES. 49.9K 1% 1/8W	1	EA	FWSI	625
R 003	605-09-24901	RES. 24.9K 1% 1/8W	1	EA	FWSI	625
R 004	605-09-12401	RES. 12.4K 1% 1/8W	1	EA	FWSI	625
R 005	605-09-12401	RES. 12.4K 1% 1/8W	1	EA	FWSI	625
R 006	605-09-12701	RES. 12.7K 1% 1/8W	1	EA	FWSI	625
R 007	605-09-49900	RES. 4.99K 1% 1/8W	1	EA	FWSI	625
R 008	605-09-24900	RES. 2.49K 1% 1/8W	1	EA	FWSI	625
R 009	605-09-12400	RES. 1.24K 1% 1/8W	1	EA	FWSI	625
R 010	605-09-12400	RES. 1.24K 1% 1/8W	1	EA	FWSI	625

CONTINUED

PARTS LIST: 16657-1 MFR. NAME: FWSI PARENT STK. CONT. NO.: 205-89-00713

DESCRIPTION: PWA,POLE PAIR UM: EA ECO NO.: 0401067 ENG. REV.: HC

4142-84

ITEM NO.	COMPONENT STK. CONT. NO.	DESCRIPTION	QUANTITY	UM	MFR. NAME	MFR. PART/ASSY. NO.
R 011	605-09-12700	RES. 1.27K 1% 1/8W	1	EA	FWSI	625
R 012	616-02-01009	RES,10 OHM 5% 1/4W	1	EA	ALLEN BRAD	RC07GF100J
R 013	616-02-10009	RES,100 OHM 5% 1/4W	1	EA	ALLEN BRAD	RC07GF101J
R 015	616-02-51000	RES,5.1K 5% 1/4W	1	EA	ALLEN BRAD	RC07GF512J
R 016	616-02-10009	RES,100 OHM 5% 1/4W	1	EA	ALLEN BRAD	RC07GF101J
R 017	605-09-10002	RES. 100K 1% 1/8W	1	EA	FWSI	625
R 018	605-09-49901	RES. 49.9K 1% 1/8W	1	EA	FWSI	625
R 019	605-09-24901	RES. 24.9K 1% 1/8W	1	EA	FWSI	625
R 020	605-09-12401	RES. 12.4K 1% 1/8W	1	EA	FWSI	625
R 021	605-09-12401	RES. 12.4K 1% 1/8W	1	EA	FWSI	625
R 022	605-09-12701	RES. 12.7K 1% 1/8W	1	EA	FWSI	625
R 023	605-09-49900	RES. 4.99K 1% 1/8W	1	EA	FWSI	625
R 024	605-09-24900	RES. 2.49K 1% 1/8W	1	EA	FWSI	625
R 025	605-09-12400	RES. 1.24K 1% 1/8W	1	EA	FWSI	625
R 026	605-09-12400	RES. 1.24K 1% 1/8W	1	EA	FWSI	625
R 027	605-09-12700	RES. 1.27K 1% 1/8W	1	EA	FWSI	625
R 028	616-02-10009	RES,100 OHM 5% 1/4W	1	EA	ALLEN BRAD	RC07GF101J
R 029	201-98-00295	POT,TRMR,1.0 K 10% .75W	1	EA	BECK/MML	89PR1K
R 030	616-02-51000	RES,5.1K 5% 1/4W	1	EA	ALLEN BRAD	RC07GF512J
R 031	616-02-10009	RES,100 OHM 5% 1/4W	1	EA	ALLEN BRAD	RC07GF101J
R 032	616-02-01009	RES,10 OHM 5% 1/4W	1	EA	ALLEN BRAD	RC07GF100J
R 033	616-02-01009	RES,10 OHM 5% 1/4W	1	EA	ALLEN BRAD	RC07GF100J
R 035	616-02-10002	RES,100K 5% 1/4W	1	EA	ALLEN BRAD	RC07GF104J
TP001	143-98-00017	JACK,TEST PT,PW TYPE,RED	1	EA	AMP INC.	3-582340-2
TP002	143-98-00017	JACK,TEST PT,PW TYPE,RED	1	EA	AMP INC.	3-582340-2
TP003	143-98-00017	JACK,TEST PT,PW TYPE,RED	1	EA	AMP INC.	3-582340-2
U 001	046-34-00014	IC,LIN VOLTAGE FOLLOWER	1	EA	NSC/MML	LM310H
U 002	046-34-00014	IC,LIN VOLTAGE FOLLOWER	1	EA	NSC/MML	LM310H
REF001	905-01-00540	SCHEMATIC,PWA	AR	EA	FWSI	16655
REF002	905-04-00002	SPEC,COMPONENT SPACING	AR	EA	FWSI	9500-1

END OF LIST

PARTS LIST: 16657 MFR. NAME: FWSI PARENT STK. CONT. NO.: 205-89-00712

DESCRIPTION: PWA,POLE PAIR UM: EA ECO NO.: 0401067 ENG. REV.: GC

4142/4143

ITEM NO.	COMPONENT STK. CONT. NO.	DESCRIPTION	QUANTITY	UM	MFR. NAME	MFR. PART/ASSY. NO.
001	204-99-00506	PWB,POLE PAIR	1	EA	FWSI	16656
002	299-99-00012	EJCTR,CARD,.062BD,POSN12	2	EA	FWSI	6477-11
003	071-98-00060	CORE,BEAD EMI/RFI SUPRESR	4	EA	FCC/STPL	56-590-65/3B;57-0180
004	189-98-00011	PAD,XSTR,TO-5 8PIN,.075H	2	EA	MILTON ROSS	10193-DAP
C 001	707-01-22403	CAP., 2.24MF 1% 50V	1	EA	FWSI	904
C 002	707-01-31803	CAP., 3.18MF 1% 50V	1	EA	FWSI	904
C 003	707-01-22402	CAP., 0.224MF 1% 50V	1	EA	FWSI	904
C 004	707-01-31802	CAP., 0.318MF 1% 50V	1	EA	FWSI	904
C 005	707-01-22401	CAP., .0224MF 1% 50V	1	EA	FWSI	904
C 006	707-01-31801	CAP., .0318MF 1% 50V	1	EA	FWSI	904
C 007	305-20-20000	CAP. 2000PF 1% 500V	1	EA	FWSI	600
C 008	305-20-30000	CAP. 3000PF 1% 500V	1	EA	FWSI	600
C 010	304-20-20009	CAP. 200PF 1% 500V	1	EA	FWSI	600
C 011	707-01-22403	CAP., 2.24MF 1% 50V	1	EA	FWSI	904
C 012	707-01-15203	CAP., 1.52MF 1% 50V	1	EA	FWSI	904
C 013	707-01-22402	CAP., 0.224MF 1% 50V	1	EA	FWSI	904
C 014	707-01-15202	CAP., .152MF 1% 50V	1	EA	FWSI	904
C 015	707-01-22401	CAP., .0224MF 1% 50V	1	EA	FWSI	904
C 016	707-01-15201	CAP., .0152MF 1% 50V	1	EA	FWSI	904
C 017	305-20-20000	CAP. 2000PF 1% 500V	1	EA	FWSI	600
C 018	305-20-13000	CAP. 1300PF 1% 500V	1	EA	FWSI	600
C 019	304-20-25009	CAP. 250PF 1% 500V	1	EA	FWSI	600
C 020	304-20-13009	CAP. 130PF 1% 500V	1	EA	FWSI	600
C 021	301-13-10002	CAP,CR , 50V .100 UF 20%	1	EA	ERIE/MML	8131-050-651-104M
C 023	301-13-10002	CAP,CR , 50V .100 UF 20%	1	EA	ERIE/MML	8131-050-651-104M
C 024	337-14-68003	CAP. 6.8MF 10% 35V	1	EA	FWSI	601
C 025	301-13-10002	CAP,CR , 50V .100 UF 20%	1	EA	ERIE/MML	8131-050-651-104M
C 027	301-13-10002	CAP,CR , 50V .100 UF 20%	1	EA	ERIE/MML	8131-050-651-104M
C 028	337-14-68003	CAP. 6.8MF 10% 35V	1	EA	FWSI	601
C 029	337-14-68003	CAP. 6.8MF 10% 35V	1	EA	FWSI	601
C 030	304-20-15009	CAP. 150PF 1% 500V	1	EA	FWSI	600
C 031	304-13-05809	CAP. 58PF 1% 500V	1	EA	FWSI	600
C 032	304-20-15009	CAP. 150PF 1% 500V	1	EA	FWSI	600
C 033	304-20-11009	CAP. 110PF 1% 500V	1	EA	FWSI	600
C 034	304-20-10009	CAP. 100PF 1% 500V	1	EA	FWSI	600
CR001	088-10-41480	DIODE,SW,75V/5UA,4NS/10MA	1	EA	CODI/MML	1N4148
CR002	088-10-41480	DIODE,SW,75V/5UA,4NS/10MA	1	EA	CODI/MML	1N4148
CR003	088-10-41480	DIODE,SW,75V/5UA,4NS/10MA	1	EA	CODI/MML	1N4148
CR004	088-10-41480	DIODE,SW,75V/5UA,4NS/10MA	1	EA	CODI/MML	1N4148
CR005	088-10-41480	DIODE,SW,75V/5UA,4NS/10MA	1	EA	CODI/MML	1N4148
CR006	088-10-41480	DIODE,SW,75V/5UA,4NS/10MA	1	EA	CODI/MML	1N4148

CONTINUED

PARTS LIST: 16657 MFR. NAME: FWSI PARENT STK. CONT. NO.: 205-89-00712

DESCRIPTION: PWA,POLE PAIR UM: EA ECO NO.: 0401067 ENG. REV.: GC
4142/4143

ITEM NO.	COMPONENT STK. CONT. NO.	DESCRIPTION	QUANTITY	UM	MFR. NAME	MFR. PART/ASSY. NO.
CR007	088-10-41480	DIODE,SW,75V/5UA,4NS/10MA	1	EA	CODI/MML	1N4148
CR008	088-10-41480	DIODE,SW,75V/5UA,4NS/10MA	1	EA	CODI/MML	1N4148
CR009	088-10-41480	DIODE,SW,75V/5UA,4NS/10MA	1	EA	CODI/MML	1N4148
CR010	088-10-41480	DIODE,SW,75V/5UA,4NS/10MA	1	EA	CODI/MML	1N4148
CR011	088-10-41480	DIODE,SW,75V/5UA,4NS/10MA	1	EA	CODI/MML	1N4148
CR012	088-10-41480	DIODE,SW,75V/5UA,4NS/10MA	1	EA	CODI/MML	1N4148
CR013	088-10-41480	DIODE,SW,75V/5UA,4NS/10MA	1	EA	CODI/MML	1N4148
CR014	088-10-41480	DIODE,SW,75V/5UA,4NS/10MA	1	EA	CODI/MML	1N4148
CR015	088-10-41480	DIODE,SW,75V/5UA,4NS/10MA	1	EA	CODI/MML	1N4148
CR016	088-10-41480	DIODE,SW,75V/5UA,4NS/10MA	1	EA	CODI/MML	1N4148
CR017	088-10-41480	DIODE,SW,75V/5UA,4NS/10MA	1	EA	CODI/MML	1N4148
CR018	088-10-41480	DIODE,SW,75V/5UA,4NS/10MA	1	EA	CODI/MML	1N4148
CR019	088-10-41480	DIODE,SW,75V/5UA,4NS/10MA	1	EA	CODI/MML	1N4148
K 001	219-99-00028	RELAY,2 FORM A,GOLD CONT	1	EA	FWSI/MML	28531-21
K 002	219-99-00028	RELAY,2 FORM A,GOLD CONT	1	EA	FWSI/MML	28531-21
K 003	219-99-00028	RELAY,2 FORM A,GOLD CONT	1	EA	FWSI/MML	28531-21
K 004	219-99-00028	RELAY,2 FORM A,GOLD CONT	1	EA	FWSI/MML	28531-21
K 005	219-99-00028	RELAY,2 FORM A,GOLD CONT	1	EA	FWSI/MML	28531-21
K 006	219-99-00028	RELAY,2 FORM A,GOLD CONT	1	EA	FWSI/MML	28531-21
K 007	219-99-00028	RELAY,2 FORM A,GOLD CONT	1	EA	FWSI/MML	28531-21
K 008	219-99-00028	RELAY,2 FORM A,GOLD CONT	1	EA	FWSI/MML	28531-21
K 009	219-99-00028	RELAY,2 FORM A,GOLD CONT	1	EA	FWSI/MML	28531-21
K 010	219-99-00023	RELAY,4 FORM A,RHOD CONT	1	EA	FWSI/MML	28531-16
K 011	219-99-00023	RELAY,4 FORM A,RHOD CONT	1	EA	FWSI/MML	28531-16
K 012	219-99-00023	RELAY,4 FORM A,RHOD CONT	1	EA	FWSI/MML	28531-16
K 013	219-99-00023	RELAY,4 FORM A,RHOD CONT	1	EA	FWSI/MML	28531-16
K 014	219-99-00023	RELAY,4 FORM A,RHOD CONT	1	EA	FWSI/MML	28531-16
K 015	219-99-00019	RELAY,2 FORM C,GOLD CONT	1	EA	FWSI/MML	28531-12
R 001	605-09-10002	RES. 100K 1% 1/8W	1	EA	FWSI	625
R 002	605-09-49901	RES. 49.9K 1% 1/8W	1	EA	FWSI	625
R 003	605-09-24901	RES. 24.9K 1% 1/8W	1	EA	FWSI	625
R 004	605-09-12401	RES. 12.4K 1% 1/8W	1	EA	FWSI	625
R 005	605-09-12401	RES. 12.4K 1% 1/8W	1	EA	FWSI	625
R 006	605-09-12701	RES. 12.7K 1% 1/8W	1	EA	FWSI	625
R 007	605-09-49900	RES. 4.99K 1% 1/8W	1	EA	FWSI	625
R 008	605-09-24900	RES. 2.49K 1% 1/8W	1	EA	FWSI	625
R 009	605-09-12400	RES. 1.24K 1% 1/8W	1	EA	FWSI	625
R 010	605-09-12400	RES. 1.24K 1% 1/8W	1	EA	FWSI	625
R 011	605-09-12700	RES. 1.27K 1% 1/8W	1	EA	FWSI	625
R 012	616-02-01009	RES,10 OHM 5% 1/4W	1	EA	ALLEN BRAD	RC07GF100J
R 013	616-02-10009	RES,100 OHM 5% 1/4W	1	EA	ALLEN BRAD	RC07GF101J

CONTINUED

PARTS LIST: 16657 MFR. NAME: FWSI PARENT STK. CONT. NO.: 205-89-00712

DESCRIPTION: PWA,POLE PAIR UM: EA ECO NO.: 0401067 ENG. REV.: GC
4142/4143

ITEM NO.	COMPONENT STK. CONT. NO.	DESCRIPTION	QUANTITY	UM	MFR. NAME	MFR. PART/ASSY. NO.
R 015	616-02-51000	RES,5.1K 5% 1/4W	1	EA	ALLEN BRAD	RC07GF512J
R 016	616-02-10009	RES,100 OHM 5% 1/4W	1	EA	ALLEN BRAD	RC07GF101J
R 017	605-09-10002	RES. 100K 1% 1/8W	1	EA	FWSI	625
R 018	605-09-49901	RES. 49.9K 1% 1/8W	1	EA	FWSI	625
R 019	605-09-24901	RES. 24.9K 1% 1/8W	1	EA	FWSI	625
R 020	605-09-12401	RES. 12.4K 1% 1/8W	1	EA	FWSI	625
R 021	605-09-12401	RES. 12.4K 1% 1/8W	1	EA	FWSI	625
R 022	605-09-12701	RES. 12.7K 1% 1/8W	1	EA	FWSI	625
R 023	605-09-49900	RES. 4.99K 1% 1/8W	1	EA	FWSI	625
R 024	605-09-24900	RES. 2.49K 1% 1/8W	1	EA	FWSI	625
R 025	605-09-12400	RES. 1.24K 1% 1/8W	1	EA	FWSI	625
R 026	605-09-12400	RES. 1.24K 1% 1/8W	1	EA	FWSI	625
R 027	605-09-12700	RES. 1.27K 1% 1/8W	1	EA	FWSI	625
R 028	616-02-10009	RES,100 OHM 5% 1/4W	1	EA	ALLEN BRAD	RC07GF101J
R 029	201-98-00295	POT,TRMR,1.0 K 10% .75W	1	EA	BECK/MML	89PR1K
R 030	616-02-51000	RES,5.1K 5% 1/4W	1	EA	ALLEN BRAD	RC07GF512J
R 031	616-02-10009	RES,100 OHM 5% 1/4W	1	EA	ALLEN BRAD	RC07GF101J
R 032	616-02-01009	RES,10 OHM 5% 1/4W	1	EA	ALLEN BRAD	RC07GF100J
R 033	616-02-01009	RES,10 OHM 5% 1/4W	1	EA	ALLEN BRAD	RC07GF100J
R 035	616-02-10002	RES,100K 5% 1/4W	1	EA	ALLEN BRAD	RC07GF104J
TP001	143-98-00017	JACK,TEST PT,PW TYPE,RED	1	EA	AMP INC.	3-582340-2
TP002	143-98-00017	JACK,TEST PT,PW TYPE,RED	1	EA	AMP INC.	3-582340-2
TP003	143-98-00017	JACK,TEST PT,PW TYPE,RED	1	EA	AMP INC.	3-582340-2
U 001	046-34-00014	IC,LIN VOLTAGE FOLLOWER	1	EA	NSC/MML	LM310H
U 002	046-34-00014	IC,LIN VOLTAGE FOLLOWER	1	EA	NSC/MML	LM310H
REF001	905-01-00540	SCHEMATIC,PWA	AR	EA	FWSI	16655
REF002	905-04-00002	SPEC,COMPONENT SPACING	AR	EA	FWSI	9500-1

END OF LIST

PARTS LIST: 16657-2 MFR. NAME: FWSI PARENT STK. CONT. NO.: 205-89-00714

DESCRIPTION: PWA,POLE PAIR UM: EA ECO NO.: 0401067 ENG. REV.: GC

4142-84

ITEM NO.	COMPONENT STK. CONT. NO.	DESCRIPTION	QUANTITY	UM	MFR. NAME	MFR. PART/ASSY. NO.
001	204-99-00506	PWB,POLE PAIR	1	EA	FWSI	16656
002	299-99-00012	EJCTR,CARD,.062BD,POSN12	2	EA	FWSI	6477-11
003	071-98-00060	CORE,BEAD EMI/RFI SUPRESR	4	EA	FCC/STPL	56-590-65/3B;57-0180
004	189-98-00011	PAD,XSTR,TO-5 8PIN,.075H	2	EA	MILTON ROSS	10193-DAP
C 001	707-01-15903	CAP., 1.59MF 1% 50V	1	EA	FWSI	904
C 002	707-01-19803	CAP., 1.98MF 1% 50V	1	EA	FWSI	904
C 003	707-01-15902	CAP., .159MF 1% 50V	1	EA	FWSI	904
C 004	707-01-19802	CAP., .198MF 1% 50V	1	EA	FWSI	904
C 005	707-01-15901	CAP., .0159MF 1% 50V	1	EA	FWSI	904
C 006	707-01-19801	CAP., .0198MF 1% 50V	1	EA	FWSI	904
C 007	305-20-13000	CAP. 1300PF 1% 500V	1	EA	FWSI	600
C 008	305-20-18000	CAP. 1800PF 1% 500V	1	EA	FWSI	600
C 010	304-13-08209	CAP. 82PF 1% 500V	1	EA	FWSI	600
C 011	707-01-41803	CAP., 4.18MF 1% 50V	1	EA	FWSI	904
C 012	707-01-16653	CAP., 1.665MF 1% 50V	1	EA	FWSI	904
C 013	707-01-41802	CAP., .418MF 1% 50V	1	EA	FWSI	904
C 014	707-01-16652	CAP., .1665MF 1% 50V	1	EA	FWSI	904
C 015	707-01-41801	CAP., .0418 1% 50V	1	EA	FWSI	904
C 016	707-01-16651	CAP., .01665MF 1% 50V	1	EA	FWSI	904
C 017	305-20-39000	CAP. 3900PF 1% 500V	1	EA	FWSI	600
C 018	305-20-15000	CAP. 1500PF 1% 500V	1	EA	FWSI	600
C 019	304-41-68009	CAP. 680PF 1% 300V	1	EA	FWSI	600
C 020	304-20-16009	CAP. 160PF 1% 500V	1	EA	FWSI	600
C 021	301-13-10002	CAP,CR , 50V .100 UF 20%	1	EA	ERIE/MML	8131-050-651-104M
C 023	301-13-10002	CAP,CR , 50V .100 UF 20%	1	EA	ERIE/MML	8131-050-651-104M
C 024	337-14-68003	CAP. 6.8MF 10% 35V	1	EA	FWSI	601
C 025	301-13-10002	CAP,CR , 50V .100 UF 20%	1	EA	ERIE/MML	8131-050-651-104M
C 027	301-13-10002	CAP,CR , 50V .100 UF 20%	1	EA	ERIE/MML	8131-050-651-104M
C 028	337-14-68003	CAP. 6.8MF 10% 35V	1	EA	FWSI	601
C 029	337-14-68003	CAP. 6.8MF 10% 35V	1	EA	FWSI	601
C 030	304-20-10009	CAP. 100PF 1% 500V	1	EA	FWSI	600
C 031	304-13-07409	CAP. 74PF 1% 500V	1	EA	FWSI	600
C 032	304-41-56009	CAP. 560PF 1% 300V	1	EA	FWSI	600
C 033	304-20-21009	CAP. 210PF 1% 500V	1	EA	FWSI	600
C 034	304-13-07009	CAP. 70PF 1% 500V	1	EA	FWSI	600
C 036	304-08-02209	CAP.,22PF .5PF 500V	1	EA	FWSI	600
C 037	304-01-01609	CAP. 16PF .5PF 500V	1	EA	FWSI	600
CR001	088-10-41480	DIODE,SW,75V/5UA,4NS/10MA	1	EA	CODI/MML	1N4148
CR002	088-10-41480	DIODE,SW,75V/5UA,4NS/10MA	1	EA	CODI/MML	1N4148
CR003	088-10-41480	DIODE,SW,75V/5UA,4NS/10MA	1	EA	CODI/MML	1N4148
CR004	088-10-41480	DIODE,SW,75V/5UA,4NS/10MA	1	EA	CODI/MML	1N4148

CONTINUED

PARTS LIST: 16657-2 MFR. NAME: FWSI PARENT STK. CONT. NO.: 205-89-00714

DESCRIPTION: PWA,POLE PAIR UM: EA ECO NO.: 0401067 ENG. REV.: GC

4142-84

ITEM NO.	COMPONENT STK. CONT. NO.	DESCRIPTION	QUANTITY	UM	MFR. NAME	MFR. PART/ASSY. NO.
CR005	088-10-41480	DIODE,SW,75V/5UA,4NS/10MA	1	EA	CODI/MML	1N4148
CR006	088-10-41480	DIODE,SW,75V/5UA,4NS/10MA	1	EA	CODI/MML	1N4148
CR007	088-10-41480	DIODE,SW,75V/5UA,4NS/10MA	1	EA	CODI/MML	1N4148
CR008	088-10-41480	DIODE,SW,75V/5UA,4NS/10MA	1	EA	CODI/MML	1N4148
CR009	088-10-41480	DIODE,SW,75V/5UA,4NS/10MA	1	EA	CODI/MML	1N4148
CR010	088-10-41480	DIODE,SW,75V/5UA,4NS/10MA	1	EA	CODI/MML	1N4148
CR011	088-10-41480	DIODE,SW,75V/5UA,4NS/10MA	1	EA	CODI/MML	1N4148
CR012	088-10-41480	DIODE,SW,75V/5UA,4NS/10MA	1	EA	CODI/MML	1N4148
CR013	088-10-41480	DIODE,SW,75V/5UA,4NS/10MA	1	EA	CODI/MML	1N4148
CR014	088-10-41480	DIODE,SW,75V/5UA,4NS/10MA	1	EA	CODI/MML	1N4148
CR015	088-10-41480	DIODE,SW,75V/5UA,4NS/10MA	1	EA	CODI/MML	1N4148
CR016	088-10-41480	DIODE,SW,75V/5UA,4NS/10MA	1	EA	CODI/MML	1N4148
CR017	088-10-41480	DIODE,SW,75V/5UA,4NS/10MA	1	EA	CODI/MML	1N4148
CR018	088-10-41480	DIODE,SW,75V/5UA,4NS/10MA	1	EA	CODI/MML	1N4148
CR019	088-10-41480	DIODE,SW,75V/5UA,4NS/10MA	1	EA	CODI/MML	1N4148
K 001	219-99-00028	RELAY,2 FORM A,GOLD CONT	1	EA	FWSI/MML	28531-21
K 002	219-99-00028	RELAY,2 FORM A,GOLD CONT	1	EA	FWSI/MML	28531-21
K 003	219-99-00028	RELAY,2 FORM A,GOLD CONT	1	EA	FWSI/MML	28531-21
K 004	219-99-00028	RELAY,2 FORM A,GOLD CONT	1	EA	FWSI/MML	28531-21
K 005	219-99-00028	RELAY,2 FORM A,GOLD CONT	1	EA	FWSI/MML	28531-21
K 006	219-99-00028	RELAY,2 FORM A,GOLD CONT	1	EA	FWSI/MML	28531-21
K 007	219-99-00028	RELAY,2 FORM A,GOLD CONT	1	EA	FWSI/MML	28531-21
K 008	219-99-00028	RELAY,2 FORM A,GOLD CONT	1	EA	FWSI/MML	28531-21
K 009	219-99-00028	RELAY,2 FORM A,GOLD CONT	1	EA	FWSI/MML	28531-21
K 010	219-99-00023	RELAY,4 FORM A,RHOD CONT	1	EA	FWSI/MML	28531-16
K 011	219-99-00023	RELAY,4 FORM A,RHOD CONT	1	EA	FWSI/MML	28531-16
K 012	219-99-00023	RELAY,4 FORM A,RHOD CONT	1	EA	FWSI/MML	28531-16
K 013	219-99-00023	RELAY,4 FORM A,RHOD CONT	1	EA	FWSI/MML	28531-16
K 014	219-99-00023	RELAY,4 FORM A,RHOD CONT	1	EA	FWSI/MML	28531-16
K 015	219-99-00019	RELAY,2 FORM C,GOLD CONT	1	EA	FWSI/MML	28531-12
R 001	605-09-10002	RES. 100K 1% 1/8W	1	EA	FWSI	625
R 002	605-09-49901	RES. 49.9K 1% 1/8W	1	EA	FWSI	625
R 003	605-09-24901	RES. 24.9K 1% 1/8W	1	EA	FWSI	625
R 004	605-09-12401	RES. 12.4K 1% 1/8W	1	EA	FWSI	625
R 005	605-09-12401	RES. 12.4K 1% 1/8W	1	EA	FWSI	625
R 006	605-09-12701	RES. 12.7K 1% 1/8W	1	EA	FWSI	625
R 007	605-09-49900	RES. 4.99K 1% 1/8W	1	EA	FWSI	625
R 008	605-09-24900	RES. 2.49K 1% 1/8W	1	EA	FWSI	625
R 009	605-09-12400	RES. 1.24K 1% 1/8W	1	EA	FWSI	625
R 010	605-09-12400	RES. 1.24K 1% 1/8W	1	EA	FWSI	625
R 011	605-09-12700	RES. 1.27K 1% 1/8W	1	EA	FWSI	625

CONTINUED

PARTS LIST: 16657-2 MFR. NAME: FWSI PARENT STK. CONT. NO.: 205-89-00714

DESCRIPTION: PWA,POLE PAIR UM: EA ECO NO.: 0401067 ENG. REV.: GC

4142-84

ITEM NO.	COMPONENT STK. CONT. NO.	DESCRIPTION	QUANTITY	UM	MFR. NAME	MFR. PART/ASSY. NO.
R 012	616-02-01009	RES,10 OHM 5% 1/4W	1	EA	ALLEN BRAD	RC07GF100J
R 013	616-02-10009	RES,100 OHM 5% 1/4W	1	EA	ALLEN BRAD	RC07GF101J
R 015	616-02-51000	RES,5.1K 5% 1/4W	1	EA	ALLEN BRAD	RC07GF512J
R 016	616-02-10009	RES,100 OHM 5% 1/4W	1	EA	ALLEN BRAD	RC07GF101J
R 017	605-09-10002	RES. 100K 1% 1/8W	1	EA	FWSI	625
R 018	605-09-49901	RES. 49.9K 1% 1/8W	1	EA	FWSI	625
R 019	605-09-24901	RES. 24.9K 1% 1/8W	1	EA	FWSI	625
R 020	605-09-12401	RES. 12.4K 1% 1/8W	1	EA	FWSI	625
R 021	605-09-12401	RES. 12.4K 1% 1/8W	1	EA	FWSI	625
R 022	605-09-12701	RES. 12.7K 1% 1/8W	1	EA	FWSI	625
R 023	605-09-49900	RES. 4.99K 1% 1/8W	1	EA	FWSI	625
R 024	605-09-24900	RES. 2.49K 1% 1/8W	1	EA	FWSI	625
R 025	605-09-12400	RES. 1.24K 1% 1/8W	1	EA	FWSI	625
R 026	605-09-12400	RES. 1.24K 1% 1/8W	1	EA	FWSI	625
R 027	605-09-12700	RES. 1.27K 1% 1/8W	1	EA	FWSI	625
R 028	616-02-10009	RES,100 OHM 5% 1/4W	1	EA	ALLEN BRAD	RC07GF101J
R 029	201-98-00295	POT,TRMR,1.0 K 10% .75W	1	EA	BECK/MML	89PR1K
R 030	616-02-51000	RES,5.1K 5% 1/4W	1	EA	ALLEN BRAD	RC07GF512J
R 031	616-02-10009	RES,100 OHM 5% 1/4W	1	EA	ALLEN BRAD	RC07GF101J
R 032	616-02-01009	RES,10 OHM 5% 1/4W	1	EA	ALLEN BRAD	RC07GF100J
R 033	616-02-01009	RES,10 OHM 5% 1/4W	1	EA	ALLEN BRAD	RC07GF100J
R 035	616-02-10002	RES,100K 5% 1/4W	1	EA	ALLEN BRAD	RC07GF104J
TP001	143-98-00017	JACK,TEST PT,PW TYPE,RED	1	EA	AMP INC.	3-582340-2
TP002	143-98-00017	JACK,TEST PT,PW TYPE,RED	1	EA	AMP INC.	3-582340-2
TP003	143-98-00017	JACK,TEST PT,PW TYPE,RED	1	EA	AMP INC.	3-582340-2
U 001	046-34-00014	IC,LIN VOLTAGE FOLLOWER	1	EA	NSC/MML	LM310H
U 002	046-34-00014	IC,LIN VOLTAGE FOLLOWER	1	EA	NSC/MML	LM310H
REF001	905-01-00540	SCHEMATIC,PWA	AR	EA	FWSI	16655
REF002	905-04-00002	SPEC,COMPONENT SPACING	AR	EA	FWSI	9500-1

END OF LIST

PARTS LIST: 16657-5 MFR. NAME: FWSI PARENT STK. CONT. NO.: 205-89-00717

DESCRIPTION: PWA,POLE PAIR UM: EA ECO NO.: 0401067 ENG. REV.: EC

4142-06

ITEM NO.	COMPONENT STK. CONT. NO.	DESCRIPTION	QUANTITY	UM	MFR. NAME	MFR. PART/ASSY. NO.
001	204-99-00506	PWB,POLE PAIR	1	EA	FWSI	16656
002	299-99-00012	EJCTR,CARD,.062BD,POSN12	2	EA	FWSI	6477-11
003	071-98-00060	CORE,BEAD EMI/RFI SUPRESR	4	EA	FCC/STPL	56-590-65/3B;57-0180
004	189-98-00011	PAD,XSTR,TO-5 8PIN,.075H	2	EA	MILTON ROSS	10193-DAP
C 001	707-01-12203	CAP., 1.22MF 1% 50V	1	EA	FWSI	904
C 002	707-01-13803	CAP., 1.38MF 1% 50V	1	EA	FWSI	904
C 003	707-01-12202	CAP., .122MF 1% 50V	1	EA	FWSI	904
C 004	707-01-13802	CAP., .138MF 1% 50V	1	EA	FWSI	904
C 005	707-01-12201	CAP., .0122MF 1% 50V	1	EA	FWSI	904
C 006	707-01-13801	CAP., .0138MF 1% 50V	1	EA	FWSI	904
C 007	305-20-10000	CAP., 1000PF 1% NON-STD	1	EA	FWSI	600
C 008	305-20-12000	CAP. 1200PF 1% 500V	1	EA	FWSI	600
C 010	304-08-03309	CAP. 33PF .5PF 500V	1	EA	FWSI	600
C 011	707-01-62003	CAP., 6.20MF 1% 50V	1	EA	FWSI	904
C 012	707-01-17403	CAP., 1.74MF 1% 50V	1	EA	FWSI	904
C 013	707-01-62002	CAP., .620MF 1% 50V	1	EA	FWSI	904
C 014	707-01-17402	CAP., .174MF 1% 50V	1	EA	FWSI	904
C 015	707-01-62001	CAP., .0620MF 1% 50V	1	EA	FWSI	904
C 016	707-01-17401	CAP., .0174MF 1% 50V	1	EA	FWSI	904
C 017	305-41-62000	CAP., 6200PF 1% 300V	1	EA	FWSI	600
C 018	305-20-18000	CAP. 1800PF 1% 500V	1	EA	FWSI	600
C 019	305-20-12000	CAP. 1200PF 1% 500V	1	EA	FWSI	600
C 020	304-20-22009	CAP. 220PF 1% 500V	1	EA	FWSI	600
C 021	301-13-10002	CAP,CR , 50V .100 UF 20%	1	EA	ERIE/MML	8131-050-651-104M
C 023	301-13-10002	CAP,CR , 50V .100 UF 20%	1	EA	ERIE/MML	8131-050-651-104M
C 024	337-14-68003	CAP. 6.8MF 10% 35V	1	EA	FWSI	601
C 025	301-13-10002	CAP,CR , 50V .100 UF 20%	1	EA	ERIE/MML	8131-050-651-104M
C 027	301-13-10002	CAP,CR , 50V .100 UF 20%	1	EA	ERIE/MML	8131-050-651-104M
C 028	337-14-68003	CAP. 6.8MF 10% 35V	1	EA	FWSI	601
C 029	337-14-68003	CAP. 6.8MF 10% 35V	1	EA	FWSI	601
C 030	304-20-10009	CAP. 100PF 1% 500V	1	EA	FWSI	600
C 031	304-13-08209	CAP. 82PF 1% 500V	1	EA	FWSI	600
C 032	304-20-39009	CAP. 390PF 1% 500V	1	EA	FWSI	600
C 033	304-08-03009	CAP. 30PF .5PF 500V	1	EA	FWSI	600
CR001	088-10-41480	DIODE,SW,75V/5UA,4NS/10MA	1	EA	CODI/MML	1N4148
CR002	088-10-41480	DIODE,SW,75V/5UA,4NS/10MA	1	EA	CODI/MML	1N4148
CR003	088-10-41480	DIODE,SW,75V/5UA,4NS/10MA	1	EA	CODI/MML	1N4148
CR004	088-10-41480	DIODE,SW,75V/5UA,4NS/10MA	1	EA	CODI/MML	1N4148
CR005	088-10-41480	DIODE,SW,75V/5UA,4NS/10MA	1	EA	CODI/MML	1N4148
CR006	088-10-41480	DIODE,SW,75V/5UA,4NS/10MA	1	EA	CODI/MML	1N4148
CR007	088-10-41480	DIODE,SW,75V/5UA,4NS/10MA	1	EA	CODI/MML	1N4148

CONTINUED

PARTS LIST: 16657-5 MFR. NAME: FWSI PARENT STK. CONT. NO.: 205-89-00717

DESCRIPTION: PWA,POLE PAIR UM: EA ECO NO.: 0401067 ENG. REV.: EC

4142-06

ITEM NO.	COMPONENT STK. CONT. NO.	DESCRIPTION	QUANTITY	UM	MFR. NAME	MFR. PART/ASSY. NO.
CR008	088-10-41480	DIODE,SW,75V/5UA,4NS/10MA	1	EA	CODI/MML	1N4148
CR009	088-10-41480	DIODE,SW,75V/5UA,4NS/10MA	1	EA	CODI/MML	1N4148
CR010	088-10-41480	DIODE,SW,75V/5UA,4NS/10MA	1	EA	CODI/MML	1N4148
CR011	088-10-41480	DIODE,SW,75V/5UA,4NS/10MA	1	EA	CODI/MML	1N4148
CR012	088-10-41480	DIODE,SW,75V/5UA,4NS/10MA	1	EA	CODI/MML	1N4148
CR013	088-10-41480	DIODE,SW,75V/5UA,4NS/10MA	1	EA	CODI/MML	1N4148
CR014	088-10-41480	DIODE,SW,75V/5UA,4NS/10MA	1	EA	CODI/MML	1N4148
CR015	088-10-41480	DIODE,SW,75V/5UA,4NS/10MA	1	EA	CODI/MML	1N4148
CR016	088-10-41480	DIODE,SW,75V/5UA,4NS/10MA	1	EA	CODI/MML	1N4148
CR017	088-10-41480	DIODE,SW,75V/5UA,4NS/10MA	1	EA	CODI/MML	1N4148
CR018	088-10-41480	DIODE,SW,75V/5UA,4NS/10MA	1	EA	CODI/MML	1N4148
CR019	088-10-41480	DIODE,SW,75V/5UA,4NS/10MA	1	EA	CODI/MML	1N4148
K 001	219-99-00028	RELAY,2 FORM A,GOLD CONT	1	EA	FWSI/MML	28531-21
K 002	219-99-00028	RELAY,2 FORM A,GOLD CONT	1	EA	FWSI/MML	28531-21
K 003	219-99-00028	RELAY,2 FORM A,GOLD CONT	1	EA	FWSI/MML	28531-21
K 004	219-99-00028	RELAY,2 FORM A,GOLD CONT	1	EA	FWSI/MML	28531-21
K 005	219-99-00028	RELAY,2 FORM A,GOLD CONT	1	EA	FWSI/MML	28531-21
K 006	219-99-00028	RELAY,2 FORM A,GOLD CONT	1	EA	FWSI/MML	28531-21
K 007	219-99-00028	RELAY,2 FORM A,GOLD CONT	1	EA	FWSI/MML	28531-21
K 008	219-99-00028	RELAY,2 FORM A,GOLD CONT	1	EA	FWSI/MML	28531-21
K 009	219-99-00028	RELAY,2 FORM A,GOLD CONT	1	EA	FWSI/MML	28531-21
K 010	219-99-00023	RELAY,4 FORM A,RHOD CONT	1	EA	FWSI/MML	28531-16
K 011	219-99-00023	RELAY,4 FORM A,RHOD CONT	1	EA	FWSI/MML	28531-16
K 012	219-99-00023	RELAY,4 FORM A,RHOD CONT	1	EA	FWSI/MML	28531-16
K 013	219-99-00023	RELAY,4 FORM A,RHOD CONT	1	EA	FWSI/MML	28531-16
K 014	219-99-00023	RELAY,4 FORM A,RHOD CONT	1	EA	FWSI/MML	28531-16
K 015	219-99-00019	RELAY,2 FORM C,GOLD CONT	1	EA	FWSI/MML	28531-12
R 001	605-09-10002	RES. 100K 1% 1/8W	1	EA	FWSI	625
R 002	605-09-49901	RES. 49.9K 1% 1/8W	1	EA	FWSI	625
R 003	605-09-24901	RES. 24.9K 1% 1/8W	1	EA	FWSI	625
R 004	605-09-12401	RES. 12.4K 1% 1/8W	1	EA	FWSI	625
R 005	605-09-12401	RES. 12.4K 1% 1/8W	1	EA	FWSI	625
R 006	605-09-12701	RES. 12.7K 1% 1/8W	1	EA	FWSI	625
R 007	605-09-49900	RES. 4.99K 1% 1/8W	1	EA	FWSI	625
R 008	605-09-24900	RES. 2.49K 1% 1/8W	1	EA	FWSI	625
R 009	605-09-12400	RES. 1.24K 1% 1/8W	1	EA	FWSI	625
R 010	605-09-12400	RES. 1.24K 1% 1/8W	1	EA	FWSI	625
R 011	605-09-12700	RES. 1.27K 1% 1/8W	1	EA	FWSI	625
R 012	616-02-01009	RES,10 OHM 5% 1/4W	1	EA	ALLEN BRAD	RC07GF100J
R 013	616-02-10009	RES,100 OHM 5% 1/4W	1	EA	ALLEN BRAD	RC07GF101J
R 015	616-02-51000	RES,5.1K 5% 1/4W	1	EA	ALLEN BRAD	RC07GF512J

CONTINUED

PARTS LIST: 16657-5 MFR. NAME: FWSI PARENT STK. CONT. NO.: 205-89-00717

DESCRIPTION: PWA,POLE PAIR UM: EA ECO NO.: 0401067 ENG. REV.: EC

4142-06

ITEM NO.	COMPONENT STK. CONT. NO.	DESCRIPTION	QUANTITY	UM	MFR. NAME	MFR. PART/ASSY. NO.
R 016	616-02-10009	RES,100 OHM 5% 1/4W	1	EA	ALLEN BRAD	RC07GF101J
R 017	605-09-10002	RES. 100K 1% 1/8W	1	EA	FWSI	625
R 018	605-09-49901	RES. 49.9K 1% 1/8W	1	EA	FWSI	625
R 019	605-09-24901	RES. 24.9K 1% 1/8W	1	EA	FWSI	625
R 020	605-09-12401	RES. 12.4K 1% 1/8W	1	EA	FWSI	625
R 021	605-09-12401	RES. 12.4K 1% 1/8W	1	EA	FWSI	625
R 022	605-09-12701	RES. 12.7K 1% 1/8W	1	EA	FWSI	625
R 023	605-09-49900	RES. 4.99K 1% 1/8W	1	EA	FWSI	625
R 024	605-09-24900	RES. 2.49K 1% 1/8W	1	EA	FWSI	625
R 025	605-09-12400	RES. 1.24K 1% 1/8W	1	EA	FWSI	625
R 026	605-09-12400	RES. 1.24K 1% 1/8W	1	EA	FWSI	625
R 027	605-09-12700	RES. 1.27K 1% 1/8W	1	EA	FWSI	625
R 028	616-02-10009	RES,100 OHM 5% 1/4W	1	EA	ALLEN BRAD	RC07GF101J
R 029	201-98-00295	POT,TRMR,1.0 K 10% .75W	1	EA	BECK/MML	89PR1K
R 030	616-02-51000	RES,5.1K 5% 1/4W	1	EA	ALLEN BRAD	RC07GF512J
R 031	616-02-10009	RES,100 OHM 5% 1/4W	1	EA	ALLEN BRAD	RC07GF101J
R 032	616-02-01009	RES,10 OHM 5% 1/4W	1	EA	ALLEN BRAD	RC07GF100J
R 033	616-02-01009	RES,10 OHM 5% 1/4W	1	EA	ALLEN BRAD	RC07GF100J
R 035	616-02-10002	RES,100K 5% 1/4W	1	EA	ALLEN BRAD	RC07GF104J
TP001	143-98-00017	JACK,TEST PT,PW TYPE,RED	1	EA	AMP INC.	3-582340-2
TP002	143-98-00017	JACK,TEST PT,PW TYPE,RED	1	EA	AMP INC.	3-582340-2
TP003	143-98-00017	JACK,TEST PT,PW TYPE,RED	1	EA	AMP INC.	3-582340-2
U 001	046-34-00014	IC,LIN VOLTAGE FOLLOWER	1	EA	NSC/MML	LM310H
U 002	046-34-00014	IC,LIN VOLTAGE FOLLOWER	1	EA	NSC/MML	LM310H
REF001	905-01-00540	SCHEMATIC,PWA	AR	EA	FWSI	16655
REF002	905-04-00002	SPEC,COMPONENT SPACING	AR	EA	FWSI	9500-1

END OF LIST

PARTS LIST: 17399 MFR. NAME: FWSI PARENT STK. CONT. NO.: 205-89-00720

DESCRIPTION: PWA,RGLTR & OUTPUT AMPL UM: EA ECO NO.: 0401295 ENG. REV.: LA
4142-84

ITEM NO.	COMPONENT STK. CONT. NO.	DESCRIPTION	QUANTITY	UM	MFR. NAME	MFR. PART/ASSY. NO.
001	204-99-00507	PWB,REGULATOR & OUTPUT AM	1	EA	FWSI	17398
002	298-99-00013	HTSK	1	EA	FWSI	15816
003	060-21-00001	LUBRICANT SEALER	AR	EA	DOW CORNING	# 111
004	287-02-00002	NUT,HEX, 4-40	2	EA	PRCMT OPTION	MS35649-244
005	229-02-00077	SCREW,4-40X1/2 PAN HD	2	EA	PRCMT OPTION	MS51957-17
007	189-98-00004	PAD,XSTR 4 PIN*USE OPTL*	30	EA	DEL BLINN	100-000-NY
008	299-99-00015	EJCTR,CARD,.062BD,POSN15	2	EA	FWSI	6477-14
009	189-99-00002	PAD,XSTR TO-5 6 PIN,.075	1	EA	FWSI	800-2
010	049-98-00010	CLIP,THERMAL EQUALIZING	2	EA	WAKEFIELD	259-18-25
011	298-98-00008	HTSK,FOR TO-5 PKG	1	EA	IERC/MML	TXBF-032-025B
012	273-98-00066	WASHER,FLAT .125IDX.500OD	4	EA	SEASTROM	5624-39-2
013	273-98-00069	WASHER,CONICAL,#5HOLE	4	EA	ASQUARED IND	C-051313-1-50
014	189-98-00025	PAD,XSTR TO-5 4 PIN,.022	4	EA	THERMALLOY	7717-15N
C 001	304-01-01009	CAP. 10PF .5PF 500V	1	EA	FWSI	600
C 002	339-14-47004	CAP., 47MF 10% 35V	1	EA	FWSI	601
C 003	338-13-47004	CAP., 47MF 10% 20V	1	EA	FWSI	601
C 004	301-13-10002	CAP,CR , 50V .100 UF 20%	1	EA	ERIE/MML	8131-050-651-104M
C 005	304-01-01009	CAP. 10PF .5PF 500V	1	EA	FWSI	600
C 006	301-13-10002	CAP,CR , 50V .100 UF 20%	1	EA	ERIE/MML	8131-050-651-104M
C 007	337-14-68003	CAP. 6.8MF 10% 35V	1	EA	FWSI	601
C 008	339-14-47004	CAP., 47MF 10% 35V	1	EA	FWSI	601
C 009	301-13-10002	CAP,CR , 50V .100 UF 20%	1	EA	ERIE/MML	8131-050-651-104M
C 010	304-62-10000	CAP. 1000PF 1% 100V	1	EA	FWSI	600
C 012	301-13-10002	CAP,CR , 50V .100 UF 20%	1	EA	ERIE/MML	8131-050-651-104M
C 013	301-13-10002	CAP,CR , 50V .100 UF 20%	1	EA	ERIE/MML	8131-050-651-104M
C 014	337-14-68003	CAP. 6.8MF 10% 35V	1	EA	FWSI	601
C 015	339-14-47004	CAP., 47MF 10% 35V	1	EA	FWSI	601
C 016	338-13-47004	CAP., 47MF 10% 20V	1	EA	FWSI	601
C 017	301-13-10002	CAP,CR , 50V .100 UF 20%	1	EA	ERIE/MML	8131-050-651-104M
C 018	301-13-10002	CAP,CR , 50V .100 UF 20%	1	EA	ERIE/MML	8131-050-651-104M
C 019	304-13-06809	CAP. 68PF 1% 500V	1	EA	FWSI	600
C 020	338-13-47004	CAP., 47MF 10% 20V	1	EA	FWSI	601
C 021	301-13-10002	CAP,CR , 50V .100 UF 20%	1	EA	ERIE/MML	8131-050-651-104M
C 022	301-13-10002	CAP,CR , 50V .100 UF 20%	1	EA	ERIE/MML	8131-050-651-104M
C 023	301-13-10002	CAP,CR , 50V .100 UF 20%	1	EA	ERIE/MML	8131-050-651-104M
C 024	304-01-01009	CAP. 10PF .5PF 500V	1	EA	FWSI	600
C 025	301-13-10002	CAP,CR , 50V .100 UF 20%	1	EA	ERIE/MML	8131-050-651-104M
C 026	301-13-10002	CAP,CR , 50V .100 UF 20%	1	EA	ERIE/MML	8131-050-651-104M
C 027	301-13-10002	CAP,CR , 50V .100 UF 20%	1	EA	ERIE/MML	8131-050-651-104M
C 028	301-13-10002	CAP,CR , 50V .100 UF 20%	1	EA	ERIE/MML	8131-050-651-104M
CR001	088-10-40040	DIODE,RECT 400V,1A IR.01	1	EA	CODI/MML	1N4004

CONTINUED

PARTS LIST: 17399 MFR. NAME: FWSI PARENT STK. CONT. NO.: 205-89-00720

DESCRIPTION: PWA,RGLTR & OUTPUT AMPL UM: EA ECO NO.: 0401295 ENG. REV.: LA
4142-84

ITEM NO.	COMPONENT STK. CONT. NO.	DESCRIPTION	QUANTITY	UM	MFR. NAME	MFR. PART/ASSY. NO.
CR002	088-10-41480	DIODE,SW,75V/5UA,4NS/10MA	1	EA	CODI/MML	1N4148
CR003	088-10-09381	DIODE,REF,9V/7.5MA,.001 %	1	EA	CODI/MML	1N938A,B
CR004	088-99-00339	DIODE,ZENER, 4.3V,1N749A	1	EA	FWSI	642-03
CR005	088-10-40040	DIODE,RECT 400V,1A IR.01	1	EA	CODI/MML	1N4004
CR006	088-19-00029	DIO,4 PELLET 90V VF 2.47V	1	EA	FWSI/MML	23200
CR007	088-10-41480	DIODE,SW,75V/5UA,4NS/10MA	1	EA	CODI/MML	1N4148
CR008	088-10-41480	DIODE,SW,75V/5UA,4NS/10MA	1	EA	CODI/MML	1N4148
CR009	088-10-41480	DIODE,SW,75V/5UA,4NS/10MA	1	EA	CODI/MML	1N4148
CR010	088-10-41480	DIODE,SW,75V/5UA,4NS/10MA	1	EA	CODI/MML	1N4148
CR011	088-99-00339	DIODE,ZENER, 4.3V,1N749A	1	EA	FWSI	642-03
CR012	088-10-40040	DIODE,RECT 400V,1A IR.01	1	EA	CODI/MML	1N4004
CR013	088-10-40040	DIODE,RECT 400V,1A IR.01	1	EA	CODI/MML	1N4004
CR014	088-10-41480	DIODE,SW,75V/5UA,4NS/10MA	1	EA	CODI/MML	1N4148
CR015	088-10-41480	DIODE,SW,75V/5UA,4NS/10MA	1	EA	CODI/MML	1N4148
CR016	088-10-41480	DIODE,SW,75V/5UA,4NS/10MA	1	EA	CODI/MML	1N4148
K 001	219-99-00019	RELAY,2 FORM C,GOLD CONT	1	EA	FWSI/MML	28531-12
K 002	219-99-00024	RELAY,1 FORM C,GOLD CONT	1	EA	FWSI/MML	28531-17
L 001	055-89-00001	L,ASSY	1	EA	FWSI	956-1306
Q 001	263-10-40370	XSTR,PWR PNP, 7W, 1A	1	EA	FCH/MML	2N4037
Q 002	263-84-00019	XSTR,PNP PR 2N3251 MATCH	1	EA	MATCHED,AGED	805-4
Q 003	263-99-00089	XSTR,NPN DIFF AMPL,VCB 50	1	EA	FWSI	666
Q 004	263-84-00019	XSTR,PNP PR 2N3251 MATCH	1	EA	MATCHED,AGED	805-4
Q 006	263-10-39470	XSTR,NPN 40V SW-AMPL,HFE	1	EA	FCH/MML	2N3947
Q 007	263-97-00093	XSTR,PNP,SWITCH/AMPL,50V	1	EA	FCH/MML	2N3251
Q 008	263-10-39470	XSTR,NPN 40V SW-AMPL,HFE	1	EA	FCH/MML	2N3947
Q 009	263-10-49180	XSTR,PWR PNP, 30W, 3A	1	EA	FCH/MML	2N4918
Q 010	263-10-49210	XSTR,PWR NPN, 30W, 3A	1	EA	FCH/MML	2N4921
Q 011	263-10-30530	XSTR,PWR NPN, 5W, .7A	1	EA	FCH/MML	2N3053
Q 013	263-10-39470	XSTR,NPN 40V SW-AMPL,HFE	1	EA	FCH/MML	2N3947
Q 014	263-97-00093	XSTR,PNP,SWITCH/AMPL,50V	1	EA	FCH/MML	2N3251
Q 015	263-10-49180	XSTR,PWR PNP, 30W, 3A	1	EA	FCH/MML	2N4918
Q 016	263-10-49210	XSTR,PWR NPN, 30W, 3A	1	EA	FCH/MML	2N4921
Q 017	263-10-40370	XSTR,PWR PNP, 7W, 1A	1	EA	FCH/MML	2N4037
Q 018	263-97-00093	XSTR,PNP,SWITCH/AMPL,50V	1	EA	FCH/MML	2N3251
Q 019	263-97-00093	XSTR,PNP,SWITCH/AMPL,50V	1	EA	FCH/MML	2N3251
Q 020	263-10-39470	XSTR,NPN 40V SW-AMPL,HFE	1	EA	FCH/MML	2N3947
Q 021	263-10-39470	XSTR,NPN 40V SW-AMPL,HFE	1	EA	FCH/MML	2N3947
Q 022	263-10-40370	XSTR,PWR PNP, 7W, 1A	1	EA	FCH/MML	2N4037
Q 023	263-97-00093	XSTR,PNP,SWITCH/AMPL,50V	1	EA	FCH/MML	2N3251
Q 024	263-97-00093	XSTR,PNP,SWITCH/AMPL,50V	1	EA	FCH/MML	2N3251
Q 025	263-10-39470	XSTR,NPN 40V SW-AMPL,HFE	1	EA	FCH/MML	2N3947

CONTINUED

PARTS LIST: 17399 MFR. NAME: FWSI PARENT STK. CONT. NO.: 205-89-00720

DESCRIPTION: PWA,RGLTR & OUTPUT AMPL 4142-84 UM: EA ECO NO.: 0401295 ENG. REV.: LA

ITEM NO.	COMPONENT STK. CONT. NO.	DESCRIPTION	QUANTITY	UM	MFR. NAME	MFR. PART/ASSY. NO.
Q 026	263-10-39470	XSTR,NPN 40V SW-AMPL,HFE	1	EA	FCH/MML	2N3947
QA005	263-34-24840	XSTR,NPN,HFE 150 MIN@1MA	1	EA	FCH/MML	2N2484
QA012	263-34-24840	XSTR,NPN,HFE 150 MIN@1MA	1	EA	FCH/MML	2N2484
QB005	263-34-24840	XSTR,NPN,HFE 150 MIN@1MA	1	EA	FCH/MML	2N2484
QB012	263-34-24840	XSTR,NPN,HFE 150 MIN@1MA	1	EA	FCH/MML	2N2484
R 001	616-02-51000	RES,5.1K 5% 1/4W	1	EA	ALLEN BRAD	RC07GF512J
R 002	616-02-15001	RES,15K 5% 1/4W	1	EA	ALLEN BRAD	RC07GF153J
R 003	616-02-10009	RES,100 OHM 5% 1/4W	1	EA	ALLEN BRAD	RC07GF101J
R 004	616-02-10009	RES,100 OHM 5% 1/4W	1	EA	ALLEN BRAD	RC07GF101J
R 005	616-02-68000	RES,6.8K 5% 1/4W	1	EA	ALLEN BRAD	RC07GF682J
R 006	616-02-15000	RES,1.5K 5% 1/4W	1	EA	ALLEN BRAD	RC07GF152J
R 007	605-09-20000	RES. 2.0K 1% 1/8W	1	EA	FWSI	625
R 008	605-09-40200	RES. 4.02K 1% 1/8W	1	EA	FWSI	625
R 010	605-09-61900	RES. 6.19K 1% 1/8W	1	EA	FWSI	625
R 011	608-09-10001	RES. 10K 1% 1/10W	1	EA	FWSI	624
R 012	616-02-10000	RES,1K 5% 1/4W	1	EA	ALLEN BRAD	RC07GF102J
R 013	623-02-02409	RES, 24 OHM 5% 1W	1	EA	ALLEN BRAD	RC32GF240J
R 014	616-02-75009	RES,750 OHM 5% 1/4W	1	EA	ALLEN BRAD	RC07GF751J
R 015	616-02-47000	RES,4.7K 5% 1/4W	1	EA	ALLEN BRAD	RC07GF472J
R 016	201-98-00062	POT,TRMR,200 OHM 10% .5W	1	EA	BECK/MML	62PR200
R 017	605-09-20000	RES. 2.0K 1% 1/8W	1	EA	FWSI	625
R 018	201-98-00062	POT,TRMR,200 OHM 10% .5W	1	EA	BECK/MML	62PR200
R 019	608-09-10000	RES. 1K 1% 1/10W	1	EA	FWSI	624
R 020	616-02-10009	RES,100 OHM 5% 1/4W	1	EA	ALLEN BRAD	RC07GF101J
R 021	616-02-10000	RES,1K 5% 1/4W	1	EA	ALLEN BRAD	RC07GF102J
R 022	616-02-18000	RES,1.8K 5% 1/4W	1	EA	ALLEN BRAD	RC07GF182J
R 023	616-02-01009	RES,10 OHM 5% 1/4W	1	EA	ALLEN BRAD	RC07GF100J
R 024	616-02-75009	RES,750 OHM 5% 1/4W	1	EA	ALLEN BRAD	RC07GF751J
R 025	605-09-40200	RES. 4.02K 1% 1/8W	1	EA	FWSI	625
R 026	605-09-18201	RES. 18.2K 1% 1/8W	1	EA	FWSI	625
R 027	616-02-91000	RES,9.1K 5% 1/4W	1	EA	ALLEN BRAD	RC07GF912J
R 028	616-02-30009	RES. 300 OHM 5% 1/4W	1	EA	ALLEN BRAD	RC07GF301J
R 029	616-02-01009	RES,10 OHM 5% 1/4W	1	EA	ALLEN BRAD	RC07GF100J
R 030	616-02-00279	RES, 2.7 OHM 5% 1/4W	1	EA	ALLEN BRAD	RC07GF2R7J
R 031	616-02-00279	RES, 2.7 OHM 5% 1/4W	1	EA	ALLEN BRAD	RC07GF2R7J
R 032	616-02-51000	RES,5.1K 5% 1/4W	1	EA	ALLEN BRAD	RC07GF512J
R 033	616-02-68000	RES,6.8K 5% 1/4W	1	EA	ALLEN BRAD	RC07GF682J
R 034	616-02-10009	RES,100 OHM 5% 1/4W	1	EA	ALLEN BRAD	RC07GF101J
R 035	616-02-10009	RES,100 OHM 5% 1/4W	1	EA	ALLEN BRAD	RC07GF101J
R 036	605-09-10000	RES. 1K 1% 1/8W	1	EA	FWSI	625
R 037	616-02-10000	RES,1K 5% 1/4W	1	EA	ALLEN BRAD	RC07GF102J

CONTINUED

PARTS LIST: 17399 MFR. NAME: FWSI PARENT STK. CONT. NO.: 205-89-00720

DESCRIPTION: PWA,RGLTR & OUTPUT AMPL UM: EA ECO NO.: 0401295 ENG. REV.: LA
4142-84

ITEM NO.	COMPONENT STK. CONT. NO.	DESCRIPTION	QUANTITY	UM	MFR. NAME	MFR. PART/ASSY. NO.
R 038	616-02-18000	RES,1.8K 5% 1/4W	1	EA	ALLEN BRAD	RC07GF182J
R 039	616-02-51000	RES,5.1K 5% 1/4W	1	EA	ALLEN BRAD	RC07GF512J
R 040	616-02-05609	RES,56 OHM 5% 1/4W	1	EA	ALLEN BRAD	RC07GF560J
R 041	616-02-05609	RES,56 OHM 5% 1/4W	1	EA	ALLEN BRAD	RC07GF560J
R 043	616-02-10000	RES,1K 5% 1/4W	1	EA	ALLEN BRAD	RC07GF102J
R 044	616-02-10000	RES,1K 5% 1/4W	1	EA	ALLEN BRAD	RC07GF102J
R 045	623-02-02409	RES, 24 OHM 5% 1W	1	EA	ALLEN BRAD	RC32GF240J
R 046	616-02-22009	RES,220 OHM 5% 1/4W	1	EA	ALLEN BRAD	RC07GF221J
R 047	605-09-30100	RES. 3.01K 1% 1/8W	1	EA	FWSI	625
R 048	616-02-39000	RES,3.9K 5% 1/4W	1	EA	ALLEN BRAD	RC07GF392J
R 049	605-09-15001	RES. 15K 1% 1/8W	1	EA	FWSI	625
R 050	605-09-49900	RES. 4.99K 1% 1/8W	1	EA	FWSI	625
R 051	616-02-01009	RES,10 OHM 5% 1/4W	1	EA	ALLEN BRAD	RC07GF100J
R 052	201-98-00062	POT,TRMR,200 OHM 10% .5W	1	EA	BECK/MML	62PR200
R 053	605-09-90909	RES. 909 OHM 1% 1/8W	1	EA	FWSI	625
R 054	605-09-10000	RES. 1K 1% 1/8W	1	EA	FWSI	625
R 055	616-02-51000	RES,5.1K 5% 1/4W	1	EA	ALLEN BRAD	RC07GF512J
R 056	616-02-10009	RES,100 OHM 5% 1/4W	1	EA	ALLEN BRAD	RC07GF101J
R 057	616-02-10009	RES,100 OHM 5% 1/4W	1	EA	ALLEN BRAD	RC07GF101J
R 058	616-02-75009	RES,750 OHM 5% 1/4W	1	EA	ALLEN BRAD	RC07GF751J
R 059	605-09-38300	RES. 3.83K 1% 1/8W	1	EA	FWSI	625
R 060	605-09-86609	RES. 866 OHM 1% 1/8W	1	EA	FWSI	625
R 061	616-02-68000	RES,6.8K 5% 1/4W	1	EA	ALLEN BRAD	RC07GF682J
R 062	605-09-54909	RES. 549 OHM 1% 1/8W	1	EA	FWSI	625
R 063	605-09-93109	RES. 931 OHM 1% 1/8W	1	EA	FWSI	625
R 064	616-02-01009	RES,10 OHM 5% 1/4W	1	EA	ALLEN BRAD	RC07GF100J
R 065	201-98-00165	POT,TRMR,1.0 MEG 20% .5W	1	EA	BECK/MML	62PR1MEG
R 066	616-02-10003	RES,1 MEG 5% 1/4W	1	EA	ALLEN BRAD	RC07GF105J
R 067	605-09-49909	RES. 499 OHM 1% 1/8W	1	EA	FWSI	625
R 068	616-02-36000	RES,3.6K 5% 1/4W	1	EA	ALLEN BRAD	RC07GF362J
R 069	616-02-36000	RES,3.6K 5% 1/4W	1	EA	ALLEN BRAD	RC07GF362J
R 070	201-98-00296	POT,TRMR,2.0 K 10% .75W	1	EA	BECK/MML	89PR2K
R 071	201-98-00068	POT,TRMR, 50 OHM 20% .5W	1	EA	BECK/MML	62PR50
R 072	616-02-01509	RES,15 OHM 5% 1/4W	1	EA	ALLEN BRAD	RC07GF150J
R 073	616-02-01509	RES,15 OHM 5% 1/4W	1	EA	ALLEN BRAD	RC07GF150J
R 074	616-02-01509	RES,15 OHM 5% 1/4W	1	EA	ALLEN BRAD	RC07GF150J
R 075	616-02-01509	RES,15 OHM 5% 1/4W	1	EA	ALLEN BRAD	RC07GF150J
TP001	143-98-00017	JACK,TEST PT,PW TYPE,RED	1	EA	AMP INC.	3-582340-2
TP002	143-98-00017	JACK,TEST PT,PW TYPE,RED	1	EA	AMP INC.	3-582340-2
TP003	143-98-00017	JACK,TEST PT,PW TYPE,RED	1	EA	AMP INC.	3-582340-2
TP004	143-98-00017	JACK,TEST PT,PW TYPE,RED	1	EA	AMP INC.	3-582340-2

CONTINUED

PARTS LIST: 17399 MFR. NAME: FWSI PARENT STK. CONT. NO.: 205-89-00720

DESCRIPTION: PWA,RGLTR & OUTPUT AMPL 4142-84 UM: EA ECO NO.: 0401295 ENG. REV.: LA

ITEM NO.	COMPONENT STK. CONT. NO.	DESCRIPTION	QUANTITY	UM	MFR. NAME	MFR. PART/ASSY. NO.
TP005	143-98-00017	JACK,TEST PT,PW TYPE,RED	1	EA	AMP INC.	3-582340-2
TP006	143-98-00017	JACK,TEST PT,PW TYPE,RED	1	EA	AMP INC.	3-582340-2
TP007	143-98-00017	JACK,TEST PT,PW TYPE,RED	1	EA	AMP INC.	3-582340-2
TP008	143-98-00017	JACK,TEST PT,PW TYPE,RED	1	EA	AMP INC.	3-582340-2
Z 001	046-34-00020	IC,LIN AMPL,OPNL HS	1	EA	NSC/MML	LM318H
REF001	905-01-00541	SCHEMATIC,PWA,REG & OUPT	AR	EA	FWSI	17397
REF002	905-04-00002	SPEC,COMPONENT SPACING	AR	EA	FWSI	9500-1

END OF LIST

DATE 05/09/85 FAIRCHILD WESTON INC. CODE IDENT. 06141 PAGE 1

PARTS LIST: 6245-11 MFR. NAME: FWSI PARENT STK. CONT. NO.: 191-89-00329

DESCRIPTION: PANEL,ASSY REAR CONNECTOR UM: EA ECO NO.: 0401280 ENG. REV.: LA
4142-84

ITEM NO.	COMPONENT STK. CONT. NO.	DESCRIPTION	QUANTITY	UM	MFR. NAME	MFR. PART/ASSY. NO.
001	999-01-01396	PNL,ASSY,REAR,CONN*POAVAR	AR	EA	FWSI	17685
002	063-98-00056	CONN,PLUG,52PIN,R&P	1	EA	AMPHENOL	220-1N052
004	022-98-00002	BSHG,NYLON,BNC CONNECTOR	3	EA	MILTON ROSS	10221-N
005	063-02-00014	CONN,RCPT,BHD,BNC COAX	3	EA	QVL	UG-1094A/U
006	134-98-00006	HLDR,FUSE,3AG,RTANG TERM	1	EA	LTLF	342004-L
007	120-98-00022	FUSE,SLO-BLO,1.5AMP,125V	1	EA	LITTELFUSE	31301.5
008	999-01-01397	FAN,BLOWER,*POA/VAR*	AR	EA	FWSI	17685
010	063-98-00021	CONN,RECP,3-WIRE	1	EA	HUBBELL/AH&H	7486/7486
011	273-98-00045	WASHER,PHENOLIC .385 ID	3	EA	SEASTROM	5620-89-62
012	273-02-00006	WASHER,#6, FLT ST STL	4	EA	PRCMT OPTION	MS15795-805
013	229-02-00084	SCREW,6-32X5/16 PAN HD	4	EA	PRCMT OPTION	MS51957-27
014	287-02-00003	NUT,HEX, 6-32	8	EA	PRCMT OPTION	MS35649-264
015	273-02-00026	WASHER,#6,INT TOOTH	7	EA	PRCMT OPTION	MS35333-71
016	229-02-00089	SCREW,6-32X3/4 PAN HD	4	EA	PRCMT OPTION	MS51957-32
021	255-98-00012	TERM,SLDR LUG,3/8 STUD	3	EA	H.H.SMITH	1497
022	200-98-00003	POST,BINDING,5WAY MET	1	EA	SUPERIOR	BP30GP10
023	200-98-00001	POST,BINDING,5WAY BLK	1	EA	SUP/HH SMITH	DF30BC/257-103
024	268-98-00026	TBG, 3/4 ,THERMO-FIT,WHT	0.17	FT	RACHEM/MML	RNF-100-3/4-WHT
025	065-98-00002	CONT,RELIA-TAC,FEMALE	52	EA	AMPHENOL	220-S02
027	255-98-00064	TERM,SLDR LUG, #6 STUD	4	EA	ZIERICK	409 #6 BRASS OR BRONZE
030	290-99-00002	BUTTON,PLUG MODIFIED	1	EA	FWSI	16667
031	075-99-00080	COVER	1	EA	FWSI	11735
033	273-98-00047	WASHER,FIBRE .016THK	1	EA	SEASTROM	5600-40-16
034	255-98-00002	TERM,SLDR LUG,#10 STUD	1	EA	ZIERICK	376-218
C 001	301-23-27003	CAP,CR , 50V 2.7 UF 20%	1	EA	ERIE/MML	8141-050-651-275M
REF001	905-13-00083	WIRING,DIAGRAM,PANEL,REAR	AR	EA	FWSI	18484

END OF LIST

DATE 05/09/85 FAIRCHILD WESTON INC. CODE IDENT. 06141 PAGE 1

PARTS LIST: 14976-3 MFR. NAME: FWSI PARENT STK. CONT. NO.: 202-89-00029

DESCRIPTION: PWR SPLY,ASSY UM: EA ECO NO.: 0401280 ENG. REV.: KD

4142-84

ITEM NO.	COMPONENT STK. CONT. NO.	DESCRIPTION	QUANTITY	UM	MFR. NAME	MFR. PART/ASSY. NO.
001	042-89-00088	CHAS,ASSY,WELDMENT	1	EA	FWSI	14139
003	214-98-00032	RECT,BRDG,FW 10A 600V PK,	3	EA	GI/MML	KBPC10-06
004	353-91-84006	CAP., 8400MF -10&75% 40V	2	EA	SPR/MML	36D842G040BB2B
006	016-98-00023	BRKT,CAP MTG,2.00 IN NOM	2	EA	SANGAMO	115058-05
007	016-98-00022	BRKT,CAP MTG,1.38 IN NOM	2	EA	SPRG/MML	4586-97A
008	999-01-01394	XFMR,*POA/VAR*	AR	EA	FWSI	17685
009	298-99-00014	HTSK	1	EA	FWSI	14975
012	060-21-00002	CMPD,HEAT CONDUCTIVE GEL	AR	EA	DOW CORNING	DOW CORNING 340
014	353-89-92006	CAP., 9200MF -10&75% 15V	1	EA	SPR/MML	36D922G015AB2B
015	229-02-00078	SCREW,4-40X5/8 PAN HD	6	EA	PRCMT OPTION	MS51957-18
016	229-02-00085	SCREW,6-32X3/8 PAN HD	10	EA	PRCMT OPTION	MS51957-28
017	273-02-00026	WASHER,#6,INT TOOTH	12	EA	PRCMT OPTION	MS35333-71
018	287-02-00003	NUT,HEX, 6-32	10	EA	PRCMT OPTION	MS35649-264
019	287-02-00002	NUT,HEX, 4-40	12	EA	PRCMT OPTION	MS35649-244
020	229-02-00077	SCREW,4-40X1/2 PAN HD	8	EA	PRCMT OPTION	MS51957-17
021	273-02-00005	WASHER,#4, FLT ST STL	9	EA	PRCMT OPTION	MS15795-804
022	229-02-00073	SCREW,4-40X1/4 PAN HD	4	EA	PRCMT OPTION	MS51957-13
023	229-02-00086	SCREW,6-32X7/16 PAN HD	4	EA	PRCMT OPTION	MS51957-29
024	273-02-00026	WASHER,#6,INT TOOTH	4	EA	PRCMT OPTION	MS35333-71
026	229-02-00075	SCREW,4-40X3/8 PAN HD	4	EA	PRCMT OPTION	MS51957-15
027	353-96-36006	CAP, 3600 UF -10+75% 40V	1	EA	SPR/MML	36D362G040AB2A
028	140-98-00024	INSUL,MICA,.003THK	5	EA	MOT/MML	B52600F011
029	273-98-00023	WASHER,SHLDR,NYL,#4SCREW	10	EA	SEASTROM	5607-10
030	127-98-00011	GROM,RUBBER,ID.50,MTG .62	2	EA	GEN CEMENT	#1043-1C OR M
031	134-98-00012	HOLDER,FUSE,.25X1.25FUSE	4	EA	LITTELFUSE	357001
032	120-98-00012	FUSE,NORM-BLO,1AMP,250V	3	EA	LITTELFUSE	312001
033	120-98-00034	FUSE,NORM-BLO,2AMP,250V	1	EA	LITTEL/BUSS	312002/AGC-2
034	263-97-50670	XSTR,PWR NPN, 87.5W,5A	1	EA	MOT/MML	2N5067
035	263-97-49010	XSTR,PWR PNP, 87.5W,5A	2	EA	MOT/MML	2N4901
037	263-10-37910	XSTR,PWR PNP, 150W, 10A	1	EA	FCH/MML	2N3791
038	255-98-00010	TERM,SLDR LUG, #4 STUD	4	EA	SHAKEPROOF	2106-04-00
039	273-02-00025	WASHER,#4,INT TOOTH	12	EA	PRCMT OPTION	MS35333-70
040	255-98-00002	TERM,SLDR LUG,#10 STUD	10	EA	ZIERICK	376-218
041	273-02-00004	WASHER,#4, FLT ST STL	4	EA	PRCMT OPTION	MS15795-803
042	273-02-00010	WASHER,#10, FLT ST STL	4	EA	PRCMT OPTION	MS15795-808
REF001	999-01-01395	WIRING,DIAGRM,PS*POA/VAR*	AR	EA	FWSI	17685
REF002	905-05-00189	VARIABLE CHART	AR	EA	FWSI	17685

END OF LIST

TECHNICAL MANUAL UTILITY REPORT

At Fairchild Weston, Inc., we continuously strive to produce high quality and usable technical manuals for our equipment. To help us in this regard, we request that after reading and using this manual, you record your comments and suggestions on this utility report and return it to Fairchild Weston, Inc. When completed, remove this page from manual, fold on dotted lines, staple, and mail. Insert additional sheets if necessary.

Manual Title and Publication Date:

_____

_____

_____

_____

Report Submitted By:

Name _____

Title _____

Orgn. _____

Date _____

Comments or Suggestions:

(Fold along this line)

FIRST CLASS
Permit No. 329
Sarasota, Fla.

BUSINESS REPLY MAIL
No Postage Stamp Necessary if Mailed in the United States

Postage will be paid by

FAIRCHILD WESTON, INC.
P.O. BOX 3041
SARASOTA, FLA. 33578

Attn: Technical Publications
Mail Stop No. 46

(Staple here)

(Fold along this line)

MP MASTER
MA29954